CSS CODE

CODE OF SAFE PRACTICE FOR CARGO STOWAGE AND SECURING

2011 EDITION

INCLUDING REVISED GUIDELINES FOR THE PREPARATION OF THE CARGO SECURING MANUAL

IMO
INTERNATIONAL MARITIME ORGANIZATION

IMO PUBLICATION
Sales number: IB292E

Preface

Upon instructions by the Maritime Safety Committee (MSC), the Sub- Committee on Containers and Cargoes (which was later superseded by the Sub-Committee on Dangerous Goods, Solid Cargoes and Containers) developed the Code of Safe Practice for Cargo Stowage and Securing. The Code was approved by the Committee at its fifty-eighth session (May 1990) and was adopted by the Assembly at its seventeenth regular session (November 1991) by resolution A.714(17).

The Assembly recommended that Governments implement the Code at the earliest possible opportunity and requested the MSC to keep it under review and amend it as necessary.

The Code has undergone subsequent changes through the years. The first major change was the amendments of MSC/Circ.664, adopted at the sixty- fourth session of MSC (5 to 9 December 1994), and MSC/Circ.691, adopted by the Committee at its sixty-fifth session (9 to 17 May 1995), both of which were issued as the 1994/1995 Amendments to the Code of Safe Practice for Cargo Stowage and Securing, introducing annex 13, which has subsequently been incorporated into this edition.

This edition includes amendments to annex 12 on safe stowage and securing of unit loads, issued as MSC/Circ.740 on 14 June 1996 at the sixty-sixth session of the Maritime Safety Committee. It also contains amendments adopted by the Committee at its seventy-fifth session (15 to 24 May 2002), issued as MSC/Circ.1026, which saw significant changes in the contents of annex 13.

The Committee, at its eighty-seventh session (12-21 May 2010), approved the following amendments to the Code: by MSC.1/Circ.1352 incorporating a new annex 14 – Guidance on Providing Safe Working Conditions for Securing of Containers on Deck which apply in their entirety for containerships, the keels of which were laid or which are at a similar stage of construction on or after 1 January 2015; sections 4.4 (Training and familiarization), 7.1 (Introduction), 7.3 (Maintenance) and section 8 (Specialized container safety design) apply to existing containerships, the keels of which were laid or which are at a similar stage of construction before 1 January 2015; and the principles of this guidance contained in section 6 (Design) and 7.2 (Operational procedures) are applied to existing containerships as far as practical by the flag State Administration with the understanding that existing ships would not be required to be enlarged or undergo other major structural modifications as determined.

The committee also approved by MSC.1/Circ.1353 – Revised guidelines for the preparation of the Cargo Securing Manual which apply in their entirety for containerships, the keels of which were laid on or which were at a similar stage of construction before 1 January 2015. In addition, the Committee approved by MSC.1/Circ.1354 – Amendments to the elements to be taken into account when considering the safe stowage and securing of cargo units and vehicles in ships (resolution A.533(13)); and further approved, by MSC.1/Circ.1355 – Amendments to the guidelines for securing arrangements for the transport of road vehicles on ro-ro ships (resolution A.581(14)), as amended by MSC/Circ.812.

The Code includes, as appendices, various texts which have been issued by the Organization and are considered relevant to cargo stowage and securing. Any amendments or revisions, which may be made in future, will be included in subsequent editions of this Code.

Code of Safe Practice for Cargo Stowage and Securing

Foreword

The proper stowage and securing of cargoes is of the utmost importance for the safety of life at sea. Improper stowage and securing of cargoes has resulted in numerous serious ship casualties and caused injury and loss of life, not only at sea but also during loading and discharge.

In order to deal with the problems and hazards arising from improper stowage and securing of certain cargoes on ships, the International Maritime Organization (IMO) has issued guidelines in the form of either Assembly resolutions or circulars adopted by the Maritime Safety Committee (MSC); these are listed hereunder:

- Safe stowage and securing of cargo units and other entities in ships other than cellular containerships, resolution A.489(XII) [see appendix 1];
- Guidelines for the preparation of the Cargo Securing Manual, MSC/Circ. 745 [see appendix 2];
- Elements to be taken into account when considering the safe stowage and securing of cargo units and vehicles in ships, resolution A.533 (13) [see appendix 3];
- Guidelines for securing arrangements for the transport of road vehicles on ro–ro ships, resolution A.581 (14), as amended [see appendix 4];
- IMO/ILO/UN ECE Guidelines for packing of cargo transport units [see the Supplement to the IMDG Code (sales number IH210E)];
- Recommendations for entering enclosed spaces aboard ships, resolution A.864 (20) [see appendix 5].

The accelerations acting on a ship in a seaway result from a combination of longitudinal, vertical and predominantly transverse motions. The forces created by these accelerations give rise to the majority of securing problems.

The hazards arising from these forces should be dealt with by taking measures both to ensure proper stowage and securing of cargoes on board and to reduce the amplitude and frequency of ship motions.

The purpose of this Code is to provide an international standard to promote the safe stowage and securing of cargoes by:

- drawing the attention of shipowners and ship operators to the need to ensure that the ship is suitable for its intended purpose;
- providing advice to ensure that the ship is equipped with proper cargo securing means;
- providing general advice concerning the proper stowage and securing of cargoes to minimize the risks to the ship and personnel;
- providing specific advice on those cargoes which are known to create difficulties and hazards with regard to their stowage and securing;
- advising on actions which may be taken in heavy sea conditions; and
- advising on actions which may be taken to remedy the effects of cargo shifting.

In providing such advice, it should be borne in mind that the master is responsible for the safe conduct of the voyage and the safety of the ship, its crew and its cargo.

General principles

All cargoes should be stowed and secured in such a way that the ship and persons on board are not put at risk.

The safe stowage and securing of cargoes depend on proper planning, execution and supervision.

Personnel commissioned to tasks of cargo stowage and securing should be properly qualified and experienced.

Personnel planning and supervising the stowage and securing of cargo should have a sound practical knowledge of the application and content of the Cargo Securing Manual, if provided.

In all cases, improper stowage and securing of cargo will be potentially hazardous to the securing of other cargoes and to the ship itself.

Decisions taken for measures of stowage and securing cargo should be based on the most severe weather conditions which may be expected by experience for the intended voyage.

Ship-handling decisions taken by the master, especially in bad weather conditions, should take into account the type and stowage position of the cargo and the securing arrangements.

Chapter 1
General

1.1 Application

This Code applies to cargoes carried on board ships (other than solid and liquid bulk cargoes and timber stowed on deck) and, in particular, to those cargoes whose stowage and securing have proved in practice to create difficulties.

1.2 Definitions of the terms used

For the purposes of this Code:

Cargo unit means a vehicle, container, flat, pallet, portable tank, packaged unit, or any other entity, etc., and loading equipment, or any part thereof, which belongs to the ship but is not fixed to the ship as defined in Assembly resolution A.489(XII).

Intermediate bulk container (IBC) means a rigid, semi-rigid or flexible portable bulk container packaging of a capacity of not more than 3 m^3 (3,000 l), designed for mechanical handling and tested for its satisfactory resistance to handling and transport stresses.

Portable tank means a tank which is not permanently secured on board a ship, and has a capacity of more than 450 l and a shell fitted with external stabilizing members and items of service equipment and structural equipment necessary for the transport of gases, liquids or solids.

Road tank-vehicle means a vehicle with wheels and fitted with a tank or tanks intended for the transport of gases, liquids or solids by both road and sea modes of transport, the tank or tanks of which are rigidly and permanently attached to the vehicle during all normal operations of loading, transport and discharge and are neither filled nor emptied on board.

Road vehicle means a commercial vehicle, semi-trailer, road train, articulated road train or a combination of vehicles, as defined in Assembly resolution A.581(14).

Roll-trailer means a low vehicle for the carriage of cargo with one or more wheel axles on the rear and a support on the front end, which is towed or pushed in the port to and from its stowage on board the ship by a special tow-vehicle.

Ro–ro ship means a ship which has one or more decks either closed or open, not normally subdivided in any way and generally running the entire length of the ship, carrying goods which are loaded and unloaded normally in a horizontal manner.

Unit load means that a number of packages are either:

.1 placed or stacked, and secured by strapping, shrink-wrapping or other suitable means, on to a load board such as a pallet; or

.2 placed in a protective outer packaging such as a pallet box; or

.3 permanently secured together in a sling.

1.3 Forces

1.3.1 Forces which have to be absorbed by suitable arrangements for stowage and securing to prevent cargo shifting are generally composed of components acting relative to the axes of the ship:

- *longitudinal;*
- *transverse; and*

- *vertical.*

Remark: For the purpose of stowage and securing cargo, longitudinal and transverse forces are considered predominant.

1.3.2 Transverse forces alone, or the resultant of transverse, longitudinal and vertical forces, normally increase with the height of the stow and the longitudinal distance of the stow from the ship's centre of motion in a seaway. The most severe forces can be expected in the furthest forward, the furthest aft and the highest stowage position on each side of the ship.

1.3.3 The transverse forces exerted increase directly with the metacentric height of the ship. An undue metacentric height may be caused by:

- improper design of the ship;
- unsuitable cargo distribution; and
- unsuitable bunker and ballast distribution.

1.3.4 Cargo should be so distributed that the ship has a metacentric height in excess of the required minimum and, whenever practicable, within an acceptable upper limit to minimize the forces acting on the cargo.

1.3.5 In addition to the forces referred to above, cargo carried on deck may be subjected to forces arising from the effects of wind and green seas.

1.3.6 Improper shiphandling (course or speed) may create adverse forces acting on the ship and the cargo.

1.3.7 The magnitude of the forces may be estimated by using the appropriate calculation methods as contained in the Cargo Securing Manual, if provided.

1.3.8 Although the operation of anti-roll devices may improve the behaviour of the ship in a seaway, the effect of such devices should not be taken into account when planning the stowage and securing of cargoes.

1.4 Behaviour of cargoes

1.4.1 Some cargoes have a tendency to deform or to compact themselves during the voyage, which will result in a slackening of their securing gear.

1.4.2 Cargoes with low friction coefficients, when stowed without proper friction-increasing devices such as dunnage, soft boards, rubber mats, etc., are difficult to secure unless tightly stowed across the ship.

1.5 Criteria for estimating the risk of cargoshifting

1.5.1 When estimating the risk of cargo shifting, the following should be considered:

- dimensional and physical properties of the cargo;
- location of the cargo and its stowage on board;
- suitability of the ship for the particular cargo;
- suitability of the securing arrangements for the particular cargo;
- expected seasonal weather and sea conditions;
- expected ship behaviour during the intended voyage;
- stability of the ship;
- geographical area of the voyage; and
- duration of the voyage.

1.5.2 These criteria should be taken into account when selecting suitable stowage and securing methods and whenever reviewing the forces to be absorbed by the securing equipment.

1.5.3 Bearing in mind the above criteria, the master should accept the cargo on board his ship only if he is satisfied that it can be safely transported.

1.6 Cargo Securing Manual

1.6.1 Ships carrying cargo units and other entities covered in this Code and as outlined in resolution A.489(XII)(appendix 1) should carry a Cargo Securing Manual as detailed in MSC/Circ.745.*

1.6.2 The cargo securing arrangements detailed in the ship's Cargo Securing Manual, if provided, should be based on the forces expected to affect the cargo carried by the ship, calculated in accordance with the method described in annex 13 or with a method accepted by the Administration or approved by a classification society acceptable to the Administration.

1.7 Equipment

The ship's cargo securing equipment should be:

- available in sufficient quantity;
- suitable for its intended purpose, taking into account the recommendations of the Cargo Securing Manual, if provided;
- of adequate strength; easy to use; and
- well maintained.

1.8 Special cargo transport units

The shipowner and the ship operator should, where necessary, make use of relevant expertise when considering the shipment of a cargo with unusual characteristics which may require special attention to be given to its location on board vis-à-vis the structural strength of the ship, its stowage and securing, and the weather conditions which may be expected during the intended voyage.

1.9 Cargo information

1.9.1 Prior to shipment the shipper should provide all necessary information about the cargo to enable the shipowner or ship operator to ensure that:

- the different commodities to be carried are compatible with each other or suitably separated;
- the cargo is suitable for the ship;
- the ship is suitable for the cargo; and
- the cargo can be safely stowed and secured on board the ship and transported under all expected conditions during the intended voyage.

1.9.2 The master should be provided with adequate information regarding the cargo to be carried so that its stowage may be properly planned for handling and transport.

* See appendix 2.

Chapter 2

Principles of safe stowage and securing of cargoes

2.1 Suitability of cargo for transport

Cargo carried in containers, road vehicles, shipborne barges, railway wagons and other cargo transport units should be packed and secured within these units so as to prevent, throughout the voyage, damage or hazard to the ship, to the persons on board and to the marine environment.

2.2 Cargo distribution

2.2.1 It is of utmost importance that the master takes great care in planning and supervising the stowage and securing of cargoes in order to prevent cargo sliding, tipping, racking, collapsing, etc.

2.2.2 The cargo should be distributed so as to ensure that the stability of the ship throughout the entire voyage remains within acceptable limits so that the hazards of excessive accelerations are reduced as far as practicable.

2.2.3 Cargo distribution should be such that the structural strength of the ship is not adversely affected.

2.3 Cargo securing arrangements

2.3.1 Particular care should be taken to distribute forces as evenly as practicable between the cargo securing devices. If this is not feasible, the arrangements should be upgraded accordingly.

2.3.2 If, due to the complex structure of a securing arrangement or other circumstances, the person in charge is unable to assess the suitability of the arrangement from experience and knowledge of good seamanship, the arrangement should be verified by using an acceptable calculation method.

2.4 Residual strength after wear and tear

Cargo securing arrangements and equipment should have sufficient residual strength to allow for normal wear and tear during their lifetime.

2.5 Friction forces

Where friction between the cargo and the ship's deck or structure or between cargo transport units is insufficient to avoid the risk of sliding, suitable material such as soft boards or dunnage should be used to increase friction.

2.6 Shipboard supervision

2.6.1 The principal means of preventing the improper stowage and securing of cargoes is through proper supervision of the loading operation and inspections of the stow.

2.6.2 As far as practicable, cargo spaces should be regularly inspected throughout the voyage to ensure that the cargo, vehicles and cargo transport units remain safely secured.

2.7 Entering enclosed spaces

The atmosphere in any enclosed space may be incapable of supporting human life through lack of oxygen or it may contain flammable or toxic gases. The master should ensure that it is safe to enter any enclosed space.

2.8 General elements to be considered by the master

Having evaluated the risk of cargo shifting, taking into account the criteria set out in 1.5, the master should ensure, prior to loading of any cargo, cargo transport unit or vehicle, that:

.1 the deck area for their stowage is, as far as practicable, clean, dry and free from oil and grease;

.2 the cargo, cargo transport unit or vehicle appears to be in suitable condition for transport, and can be effectively secured;

.3 all necessary cargo securing equipment is on board and in good working condition; and

.4 cargo in or on cargo transport units and vehicles is, to the extent practicable, properly stowed and secured onto the unit or vehicle.

2.9 Cargo stowage and securing declaration

2.9.1 Where there is reason to suspect that a container or vehicle into which dangerous goods have been packed or loaded is not in compliance with the provisions of regulation VII/5 of SOLAS 1974, as amended, or with the provisions of parts 5 and 7, as appropriate, of the IMDG Code, or where a Container Packing Certificate/Vehicle Packing Declaration is not available, the unit should not be accepted for shipment.

2.9.2 Where practicable and feasible, road vehicles should be provided with a cargo stowage and securing declaration, stating that the cargo on the road vehicle has been properly stowed and secured for the intended sea voyage, taking into account the IMO/ILO/UN ECE Guidelines for packing of cargo transport units. An example of such a declaration is given hereunder. The Vehicle Packing Declaration, recommended by the IMDG Code (see 2.9.1), may be acceptable for this purpose.

Example

CARGO STOWAGE AND SECURING DECLARATION

Vehicle no……

Place of loading……

Date of loading……

Commodity(ies)……

I hereby declare that the cargo on the above-mentioned vehicle has been properly stowed and secured for transport by sea, by taking into account the IMO/ILO/UN ECE Guidelines for packing of cargo transport units.

Name of signatory……

Status……

Place……..Date……

Signature on behalf of the packer

Remarks……

……

……

……

……

……

Chapter 3

Standardized stowage and securing systems

3.1 Recommendations

Ships intended for the carriage of cargoes in a standardized stowage and securing system (e.g. containers, railway wagons, shipborne barges, etc.) should be:

.1 so designed and equipped that the standardized cargoes concerned can be safely stowed and secured on board under all conditions expected during the intended voyage;

.2 of a design and so equipped as to be accepted by the Administration or approved by a classification society acceptable to the Administration; and

.3 provided with adequate information, for use by the master, on the arrangements provided for the safe stowage and securing of the specific cargoes for which the ship is designed or adapted.

Chapter 4

Semi-standardized stowage and securing

4.1 Securing arrangements

4.1.1 Ships intended for the carriage of certain specific cargoes such as road vehicles, systemized cargo-carrying roll-trailers and automobiles on ro–ro ships, etc., should be provided with securing points spaced sufficiently close to each other for the intended operation of the ship and in accordance with section 4 of the guidelines for securing arrangements for the transport of road vehicles on ro–ro ships (resolution A.581(14)).

4.1.2 Road vehicles intended for transport by sea should be provided with arrangements for their safe stowage and securing, as detailed in section 5 of the annex to resolution A.581(14).

4.1.3 Roll-trailers carrying systemized cargo should be provided with arrangements for the safe stowage and securing of the vehicle and its cargo. Special consideration should be given to the height of the stow, the compactness of the stow and the effects of a high centre of gravity of the cargo.

4.2 Stowage and securing of vehicles

4.2.1 Vehicles, including roll-trailers not provided with adequate securing arrangements, should be stowed and secured in accordance with chapter 5 of this Code.

4.2.2 Ro–ro ships which do not comply with the requirements of section 4 of the annex to resolution A.581(14) or are not provided with equivalent stowage and securing means providing for an equivalent degree of safety during transport by sea should be dealt with in accordance with chapter 5 of this Code.

4.2.3 Vehicles should be stowed and secured in accordance with sections 6 and 7 of the annex to resolution A.581(14). Special consideration should be given to the stowage and securing of roll-trailers carrying systemized cargo, road tank-vehicles and portable tanks on wheels, taking into account the effects of a tank's high centre of gravity and free surface.

4.3 Acceptance of road vehicles for transport by sea on ro–ro ships

4.3.1 The master should not accept a road vehicle for transport on board his ship unless satisfied that the road vehicle is apparently suitable for the intended voyage and is provided with at least the securing points specified in section 5 of the annex to resolution A.581(14).

4.3.2 In exceptional circumstances, where there is some doubt that the recommendations of 4.3.1 can or need to be fulfilled, the master may accept the vehicle for shipment, after taking into account the condition of the vehicle and the expected nature of the intended voyage.

Chapter 5

Non-standardized stowage and securing

5.1 Recommendations

5.1.1 This chapter and the annexes provide advice of a general nature for the stowage and securing of cargoes not covered by chapters 3 and 4 of this Code and particularly specific advice for the stowage and securing of cargoes which have proved to be difficult to stow and secure on board ships.

5.1.2 The list of cargoes given in 5.3 should not be regarded as exhaustive, as there may be other cargoes which could create hazards if not properly stowed and secured.

5.2 Equivalent stowage and securing

The guidance given in the annexes provides for certain safeguards against the problems inherent in the cargoes covered. Alternative methods of stowage and securing may afford the same degree of safety. It is imperative that any alternative method chosen should provide a level of securing safety at least equivalent to that described in the resolutions, circulars and guidelines listed in the foreword to this Code.

5.3 Cargoes which have proved to be a potential source of danger

Such cargoes include:

.1 containers when carried on deck of ships which are not specially designed and fitted for the purpose of carrying containers (annex 1);

.2 portable tanks (tank-containers) (annex 2);

.3 portable receptacles (annex 3);

.4 special wheel-based (rolling) cargoes (annex 4);

.5 heavy cargo items such as locomotives, transformers, etc. (annex 5);

.6 coiled sheet steel (annex 6);

.7 heavy metal products (annex 7);

.8 anchor chains (annex 8);

.9 metal scrap in bulk (annex 9);

.10 flexible intermediate bulk containers (FIBCs) (annex 10);

.11 logs in under-deck stow (annex 11); and

.12 unit loads (annex 12).

Chapter 6

Actions which may be taken in heavy weather

6.1 General

The purpose of this chapter is not to usurp the responsibilities of the master, but rather to offer some advice on how stresses induced by excessive accelerations caused by bad weather conditions could be avoided.

6.2 Excessive accelerations

Measures to avoid excessive accelerations are:

.1 alteration of course or speed or a combination of both;

.2 heaving to;

.3 early avoidance of areas of adverse weather and sea conditions; and

.4 timely ballasting or deballasting to improve the behaviour of the ship, taking into account the actual stability conditions (see also 7.2).

6.3 Voyage planning

One way of reducing excessive accelerations is for the master, as far as possible and practicable, to plan the voyage of the ship carefully so as to avoid areas with severe weather and sea conditions. The master should always consult the latest available weather information.

Chapter 7

Actions which may be taken once cargo has shifted

7.1 The following actions may be considered:

.1 alterations of course to reduce accelerations;

.2 reductions of speed to reduce accelerations and vibration;

.3 monitoring the integrity of the ship;

.4 restowing or resecuring the cargo and, where possible, increasing the friction; and

.5 diversion of route in order to seek shelter or improved weather and sea conditions.

7.2 Tank ballasting or deballasting operations should be considered only if the ship has adequate stability.

Annex 1

Safe stowage and securing of containers on deck of ships which are not specially designed and fitted for the purpose of carrying containers

1 Stowage

1.1 Containers carried on deck or on hatches of such ships should preferably be stowed in the fore-and-aft direction.

1.2 Containers should not extend over the ship's sides. Adequate supports should be provided when containers overhang hatches or deck structures.

1.3 Containers should be stowed and secured so as to permit safe access for personnel in the necessary operation of the ship.

1.4 Containers should at no time overstress the deck or hatches on which they are stowed.

1.5 Bottom-tier containers, when not resting on stacking devices, should be stowed on timber of sufficient thickness, arranged in such a way as to transfer the stack load evenly on to the structure of the stowage area.

1.6 When stacking containers, use should be made of locking devices, cones, or similar stacking aids, as appropriate, between them.

1.7 When stowing containers on deck or hatches, the position and strength of the securing points should be taken into consideration.

2 Securing

2.1 All containers should be effectively secured in such a way as to protect them from sliding and tipping. Hatch covers carrying containers should be adequately secured to the ship.

2.2 Containers should be secured using one of the three methods recommended in figure 1 or methods equivalent thereto.

2.3 Lashings should preferably consist of wire ropes or chains or material with equivalent strength and elongation characteristics.

2.4 Timber shoring should not exceed 2 m in length.

2.5 Wire clips should be adequately greased, and tightened so that the dead end of the wire is visibly compressed (figure 2).

2.6 Lashings should be kept, when possible, under equal tension.

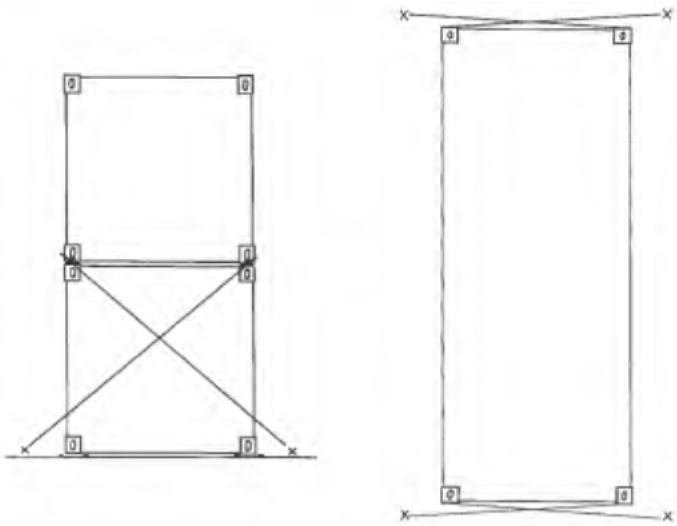

Method A – *Medium-weight containers: weight of top container not more than 70% of that of bottom container*

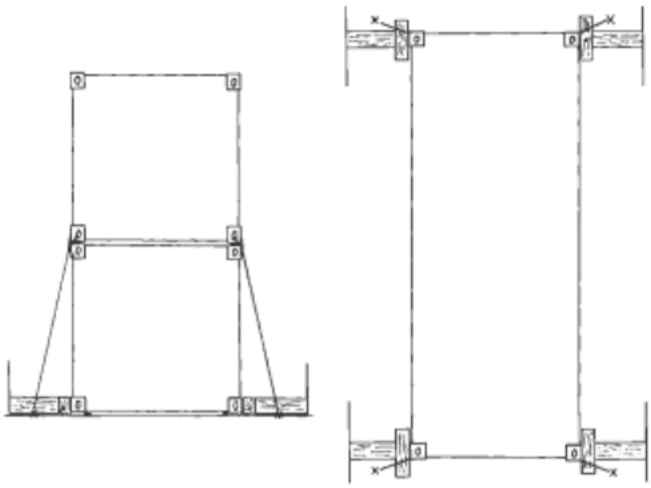

Method B – *Medium-weight containers: weight of top container may be more than 70% of that of bottom container*

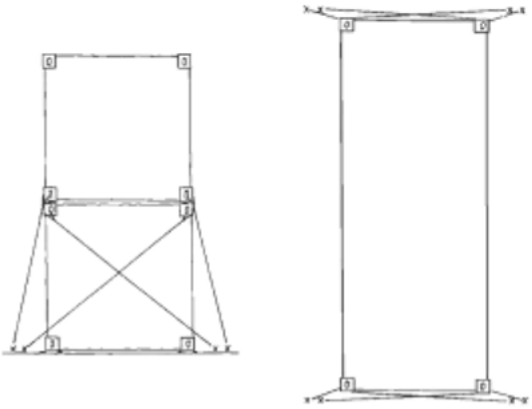

Method C – *Heavyweight containers: weight of top container may be more than 70% of that of bottom container*

Figure 1 *Recommended methods of non-standardized securing of containers*

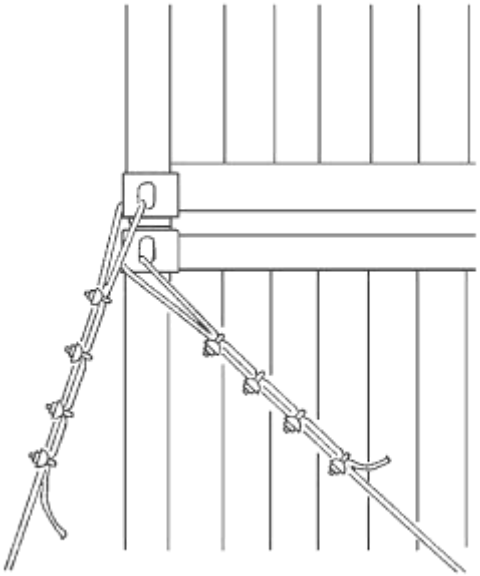

(a)

Fastening of wire lashings to Corner fittings

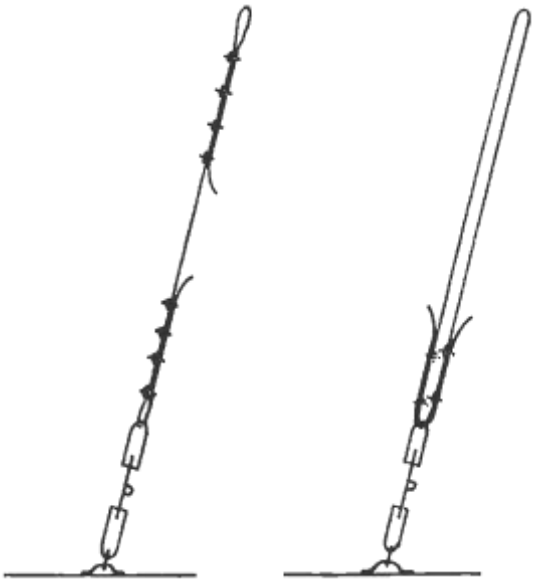

(b)

Alternative constructions of wire lashings

Figure 2

Annex 2

Safe stowage and securing of portable tanks

1 Introduction

1.1 The provisions of this annex apply to a portable tank, which in the context of this annex, means a tank which is not permanently secured on board the vessel and has a capacity of more than 450 l and a shell fitted with external stabilizing members and items of service equipment and structural equipment necessary for the transport of liquids, solids or gases.

1.2 These provisions do not apply to tanks intended for the transport of liquids, solids or gases having a capacity of 450 l or less.

Note: The capacity for portable tanks for gases is 1,000 l or more.

2 General provisions for portable tanks

2.1 Portable tanks should be capable of being loaded and discharged without the need of removal of their structural equipment and be capable of being lifted onto and off the ship when loaded.

2.2 The applicable requirements of the International Convention for Safe Containers, 1972, as amended, should be fulfilled by any tank- container which meets the definition of a container within the terms of that Convention. Additionally, the provisions of part 6 of the IMDG Code should be met when the tank will be used for the transport of dangerous goods.

2.3 Portable tanks should not be offered for shipment in an ullage condition liable to produce an unacceptable hydraulic force due to surge within the tank.

2.4 Portable tanks for the transport of dangerous goods should be certified in accordance with the provisions of the IMDG Code by the competent approval authority or a body authorized by that authority.

3 Portable tank arrangements

3.1 The external stabilizing members of a portable tank may consist of skids or cradles and, in addition, the tank may be secured to a platform- based container. Alternatively, a tank may be fixed within a framework of ISO or non-ISO frame dimensions.

3.2 Portable tank arrangements should include fittings for lifting and securing on board.

Note: All types of the aforementioned portable tanks may be carried on multipurpose ships but need special attention for lashing and securing on board.

4 Cargo information

4.1 The master should be provided with at least the following information:

- **.1** dimensions of the portable tank and commodity if non- dangerous and, if dangerous, the information required in accordance with the IMDG Code;
- **.2** the gross mass of the portable tank; and
- **.3** whether the portable tank is permanently secured onto a platform-based container or in a frame and whether securing points are provided.

5 Stowage

5.1 The typical distribution of accelerations of the ship should be borne in mind in deciding whether the portable tank will be stowed on or under deck.

5.2 Tanks should be stowed in the fore-and-aft direction on or under deck.

5.3 Tanks should be stowed so that they do not extend over the ship's side.

5.4 Tanks should be stowed so as to permit safe access for personnel in the necessary operation of the ship.

5.5 At no time should the tanks overstress the deck or hatches; the hatch covers should be so secured to the ship that tipping of the entire hatch cover is prevented.

6 Securing against sliding and tipping

6.1 Non-standardized portable tanks

6.1.1 The securing devices on non-standardized portable tanks and on the ship should be arranged in such a way as to withstand the transverse and longitudinal forces, which may give rise to sliding and tipping. The lashing angles against sliding should not be higher than 258 and against tipping not lower than 458 to 608 (figure 3).

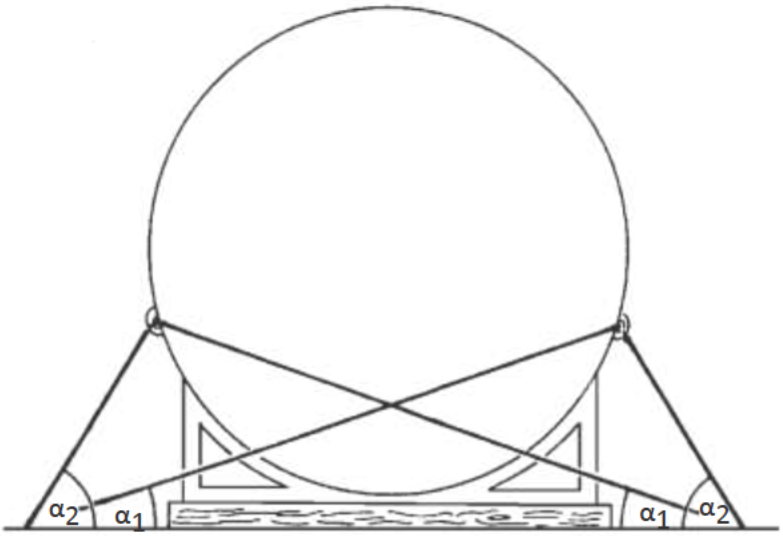

95098

α_1 : favourable angle against sliding
α_2 : favourable angle against tipping

Figure 3 – Securing of portable tanks with favourable lashing angles

6.1.2 Whenever necessary, timber should be used between the deck surface and the bottom structure of the portable tank in order to increase friction. This does not apply to tanks on wooden units or with similar bottom material having a high coefficient of friction.

6.1.3 If stowage under deck is permitted, the stowage should be such that the portable non-standardized tank can be landed directly on its place and bedding.

6.1.4 Securing points on the tank should be of adequate strength and clearly marked.

Note: Securing points designed for road and rail transport may not be suitable for transport by sea.

6.1.5 Lashings attached to tanks without securing points should pass around the tank and both ends of the lashing should be secured to the same side of the tank (figure 4).

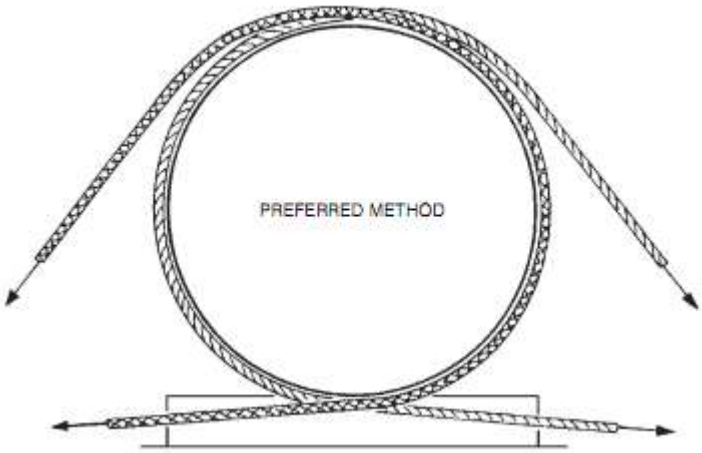

Figure 4 – *Securing of portable tanks having no securing points*

6.1.6 Sufficient securing devices should be arranged in such a way that each device takes its share of the load with an adequate factor of safety.

6.1.7 The structural strength of the deck or hatch components should be taken into consideration when tanks are carried thereon and when locating and affixing the securing devices.

6.1.8 Portable tanks should be secured in such a manner that no load is imposed on the tank or fittings in excess of those for which they have been designed.

6.2 Standardized portable tanks (tank-containers)

6.2.1 Standardized portable tanks with ISO frame dimensions should be secured according to the system of lashing with which the ship is equipped, taking into consideration the height of the tank above the deck and the ullage in the tank.

7 Maintenance of securing arrangements

7.1 The integrity of the securing arrangements should be maintained throughout the voyage.

7.2 Particular attention should be paid to the need for tight lashings, grips and clips to prevent weakening through chafing.

7.3 Lashings should be regularly checked and retightened.

Annex 3

*Safe stowage and securing of portable receptacles**

1 Introduction

1.1 A portable receptacle, in the context of these guidelines, means a receptacle not being a portable tank, which is not permanently secured on board the ship and has a capacity of 1,000 l or less and has different dimensions in length, width, height and shape and which is used for the transport of gases or liquids.

2 Portable receptacles can be divided into:

.1 cylinders of different dimensions without securing points and having a capacity not exceeding 150l;

.2 receptacles of different dimensions with the exception of cylinders in conformity with 2.1 having a capacity of not less than 100 l and not more than 1,000 l and whether or not fitted with hoisting devices of sufficient strength; and

.3 assemblies, known as "frames", of cylinders in conformity with 2.1, the cylinders being interconnected by a manifold within the frame and held firmly together by metal fittings. The frames are equipped with securing and handling devices of sufficient strength (e.g. cylindrical receptacles are equipped with rolling hoops and receptacles are secured on skids).

3 Cargo information

3.1 The master should be provided with at least the following information:

.1 dimensions of the receptacle and commodity if non-dangerous and, if dangerous, the information as required in accordance with the IMDG Code;

.2 gross mass of the receptacles; and

.3 whether or not the receptacles are equipped with hoisting devices of sufficient strength.

4 Stowage

4.1 The typical distribution of accelerations of the ship should be borne in mind in deciding whether the receptacles should be stowed on or under deck.

4.2 The receptacles should preferably be stowed in the fore-and-aft direction on or under deck.

4.3 Receptacles should be dunnaged to prevent their resting directly on a steel deck. They should be stowed and chocked as necessary to prevent movement unless mounted in a frame as a unit. Receptacles for liquefied gases should be stowed in an upright position.

4.4 When the receptacles are stowed in an upright position, they should be stowed in a block, cribbed or boxed in with suitable and sound timber. The box or crib should be dunnaged underneath to provide clearance from a steel deck. The receptacles in a box or crib should be braced to prevent movement. The box or crib should be securely chocked and lashed to prevent movement in any direction.

---

* Where in this annex the term receptacle is used, it is meant to include both receptacles and cylinders.

5 Securing against sliding and shifting

5.1 Cylinders

Cylinders should be stowed fore-and-aft on athwartships dunnage. Where practicable, the stow should be secured by using two or more wires, laid athwartships prior to loading, and passed around the stow to securing points on opposite sides. The wires are tightened to make a compact stow by using appropriate tightening devices. During loading, wedges may be necessary to prevent cylinders rolling.

5.2 Cylinders in containers

Cylinders should, whenever practicable, be stowed upright with their valves on top and with their protective caps firmly in place. Cylinders should be adequately secured, so as to withstand the rigours of the intended voyage, by means of steel strapping or equivalent means led to lashing points on the container floor. When cylinders cannot be stowed upright in a closed container, they should be carried in an open-top or a platform-based container.

5.3 Receptacles

Securing of receptacles stowed on or under deck should be as follows:

.1 lashings should be positioned as shown in figure 5;

.2 where possible, the hoisting devices on receptacles should be used to lash them; and

.3 at regular times the lashings should be checked and retightened.

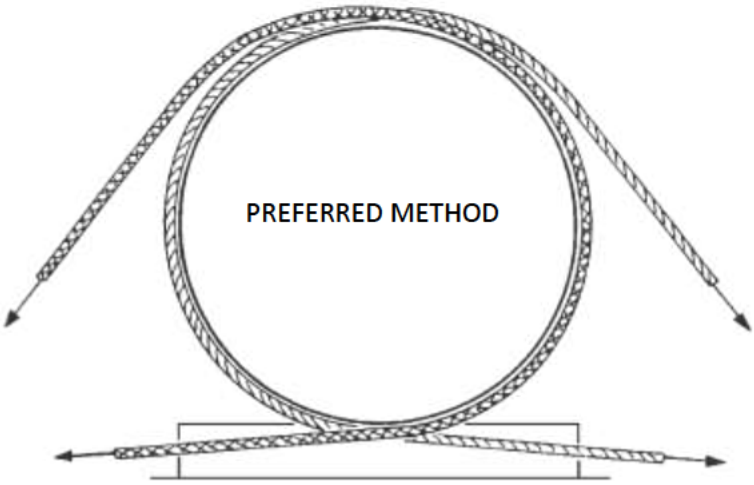

Figure 5 – *Securing of receptacles having no securing points*

Annex 4

Safe stowage and securing of wheel-based (rolling) cargoes

1 Introduction

Wheel-based cargoes, in the context of these guidelines, are all cargoes which are provided with wheels or tracks, including those which are used for the stowage and transport of other cargoes, except trailers and road- trains (covered by chapter 4 of this Code), but including buses, military vehicles with or without tracks, tractors, earth-moving equipment, roll- trailers, etc.

2 General recommendations

2.1 The cargo spaces in which wheel-based cargo is to be stowed should be dry, clean and free from grease and oil.

2.2 Wheel-based cargoes should be provided with adequate and clearly marked securing points or other equivalent means of sufficient strength to which lashings may be applied.

2.3 Wheel-based cargoes which are not provided with securing points should have those places where lashings may be applied clearly marked.

2.4 Wheel-based cargoes which are not provided with rubber wheels or tracks with friction-increasing lower surface should always be stowed on wooden dunnage or other friction-increasing material such as soft boards, rubber mats, etc.

2.5 When in stowage position, the brakes of a wheel-based unit, if so equipped, should be set.

2.6 Wheel-based cargoes should be secured to the ship by lashings made of material having strength and elongation characteristics at least equivalent to steel chain or wire.

2.7 Where possible, wheel-based cargoes, carried as part cargo, should be stowed close to the ship's side or in stowage positions which are provided with sufficient securing points of sufficient strength, or be block- stowed from side to side of the cargo space.

2.8 To prevent any lateral shifting of wheel-based cargoes not provided with adequate securing points, such cargoes should, where practicable, be stowed close to the ship's side and close to each other, or be blocked off by other suitable cargo units such as loaded containers, etc.

2.9 To prevent the shifting of wheel-based cargoes, it is, where practicable, preferable to stow those cargoes in a fore-and-aft direction rather than athwartships. If wheel-based cargoes are inevitably stowed athwartships, additional securing of sufficient strength may be necessary.

2.10 The wheels of wheel-based cargoes should be blocked to prevent shifting.

2.11 Cargoes stowed on wheel-based units should be adequately secured to stowage platforms or, where provided with suitable means, to its sides. Any movable external components attached to a wheel-based unit, such as derricks, arms or turrets, should be adequately locked or secured in position.

Annex 5

Safe stowage and securing of heavy cargo items such as locomotives, transformers, etc.

1 Cargo information

The master should be provided with sufficient information on any heavy cargo offered for shipment so that he can properly plan its stowage and securing; the information should at least include the following:

.1 gross mass;

.2 principal dimensions with drawings or pictorial descriptions, if possible;

.3 location of the centre of gravity;

.4 bedding areas and particular bedding precautions if applicable;

.5 lifting points or slinging positions; and

.6 securing points, where provided, including details of their strength.

2 Location of stowage

2.1 When considering the location for stowing a heavy cargo item, the typical distribution of accelerations on the ship should be kept in mind:

.1 lower accelerations occur in the midship sections and below the weather deck; and

.2 higher accelerations occur in the end sections and above the weather deck.

2.2 When heavy items are to be stowed on deck, the expected ''weather side'' of the particular voyage should be taken into account if possible.

2.3 Heavy items should preferably be stowed in the fore-and-aft direction.

3 Distribution of weight

The weight of the item should be distributed in such a way as to avoid undue stress on the ship's structure. Particularly with the carriage of heavy items on decks or hatch covers, suitable beams of timber or steel of adequate strength should be used to transfer the weight of the item onto the ship's structure.

4 Cargo stowed in open containers, on platforms or platform-based containers

4.1 While the stowage and securing of open containers, ISO platforms or platform-based containers (flatracks) on a containership or a ship fitted or adapted for the carriage of containers should follow the information for that system, the stowage and securing of the cargo in such containers should be carried out in accordance with the IMO/ILO/UN E C E Guidelines for packing of cargo transport units.

4.2 When heavy cargo items are carried on ISO platforms or platform- based containers (flatracks) the provisions of this annex should be followed. Additionally, the following items should be taken into account:

.1 The ISO standard platform, etc., used should be of a suitable type with regard to strength and MSL of the securing points.

.2 The weight of the heavy cargo item should be properly distributed.

.3 Where deemed necessary, the heavy cargo item(s) carried on ISO standard platform(s) or platform-based containers, etc., should not only be secured to the platform(s) or platform- based containers, etc., but also to neighbouring platform(s), etc., or to securing points located at fixed structure of the ship. The elasticity of the last-mentioned lashings should be sufficiently in line with the overall elasticity of the stowage block underneath the heavy cargo item(s) in order to avoid overloading those lashings.

5 Securing against sliding and tipping

5.1 Whenever possible, timber should be used between the stowage surface and the bottom of the unit in order to increase friction. This does not apply to items on wooden cradles or on rubber tyres or with similar bottom material having a high coefficient of friction.

5.2 The securing devices should be arranged in a way to withstand transverse and longitudinal forces which may give rise to sliding or tipping.

5.3 The optimum lashing angle against sliding is about 25°, while the optimum lashing angle against tipping is generally found between 45° and 60° (figure 6).

5.4 If a heavy cargo item has been dragged into position on greased skid boards or other means to reduce friction, the number of lashings used to prevent sliding should be increased accordingly.

5.5 If, owing to circumstances, lashings can be set at large angles only, sliding must be prevented by timber shoring, welded fittings or other appropriate means. Any welding should be carried out in accordance with accepted hot-work procedures.

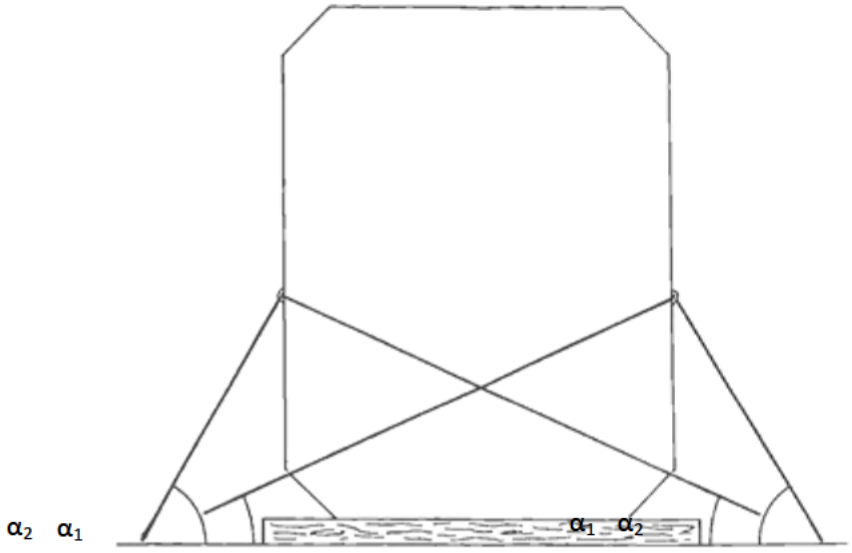

α_1 : favourable angle against sliding

α_2 : favourable angle against tipping

Figure 6 – *Principles of securing heavy items against sliding and tipping*

6 Securing against heavy seas on deck

Whilst it is recognized that securing cargo items against heavy seas on deck is difficult, all efforts should be made to secure such items and their supports to withstand such impact and special means of securing may have to be considered.

7 Heavy cargo items projecting over the ship's side

Items projecting over the ship's side should be additionally secured by lashings acting in longitudinal and vertical directions.

8 Attachment of lashings to heavy cargo items

8.1 If lashings are to be attached to securing points on the item, these securing points should be of adequate strength and clearly marked. It should be borne in mind that securing points designed for road or rail transport may not be suitable for securing the items on board ship.

8.2 Lashings attached to items without securing points should pass around the item, or a rigid part thereof, and both ends of the lashing should be secured to the same side of the unit (figure 7).

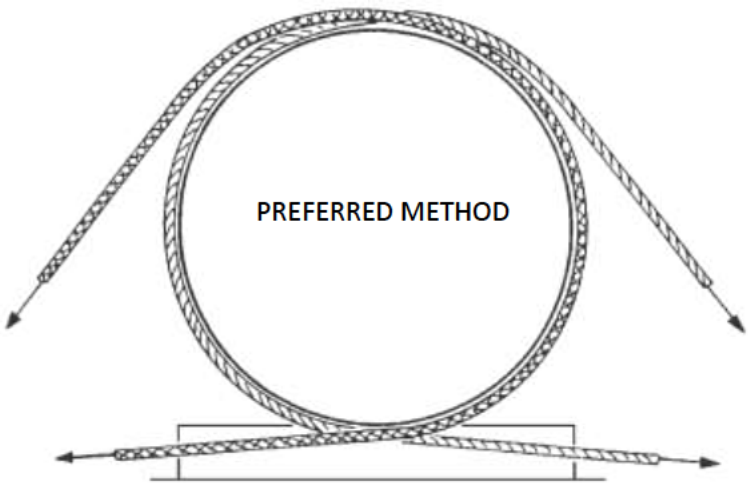

Figure 7 – *Principle of securing heavy items having no suitable securing points*

9 Composition and application of securing devices

9.1 Securing devices should be assembled so that each component is of equal strength.

9.2 Connecting elements and tightening devices should be used in the correct way. Consideration should be given to any reduction of the strength of the lashings during the voyage through corrosion, fatigue or mechanical deterioration and should be compensated by using stronger securing material.

9.3 Particular attention should be paid to the correct use of wire, grips and clips. The saddle portion of the clip should be applied to the live load segment and the U-bolt to the dead or shortened end segment.

9.4 Securing devices should be arranged in such a way that each device takes its share of load according to its strength.

9.5 Mixed securing arrangements of devices with different strength and elongation characteristics should be avoided.

10 Maintenance of securing arrangements

10.1 The integrity of the securing arrangements should be maintained throughout the voyage.

10.2 Particular attention should be paid to the need for tight lashings, grips and clips and to prevent weakening through chafing. Timber cradles, beddings and shorings should be checked.

10.3 Greasing the thread of clips and turnbuckles increases their holding capacity and prevents corrosion.

11 Securing calculation

11.1 Where necessary, the securing arrangements for heavy cargo items should be verified by an appropriate calculation in accordance with annex 13 to the Code.

Annex 6

Safe stowage and securing of coiled sheet steel

1 General

1.1 This annex deals only with coiled sheet steel stowed on the round. Vertical stowage is not dealt with because this type of stowage does not create any special securing problems.

1.2 Normally, coils of sheet steel have a gross mass in excess of 10 tonnes each.

2 Coils

2.1 Coils should be given bottom stow and, whenever possible, be stowed in regular tiers from side to side of the ship.

2.2 Coils should be stowed on dunnage laid athwartships. Coils should be stowed with their axes in the fore-and-aft direction. Each coil should be stowed against its neighbour. Wedges should be used as stoppers when necessary during loading and discharging to prevent shifting (figures 8 and 9).

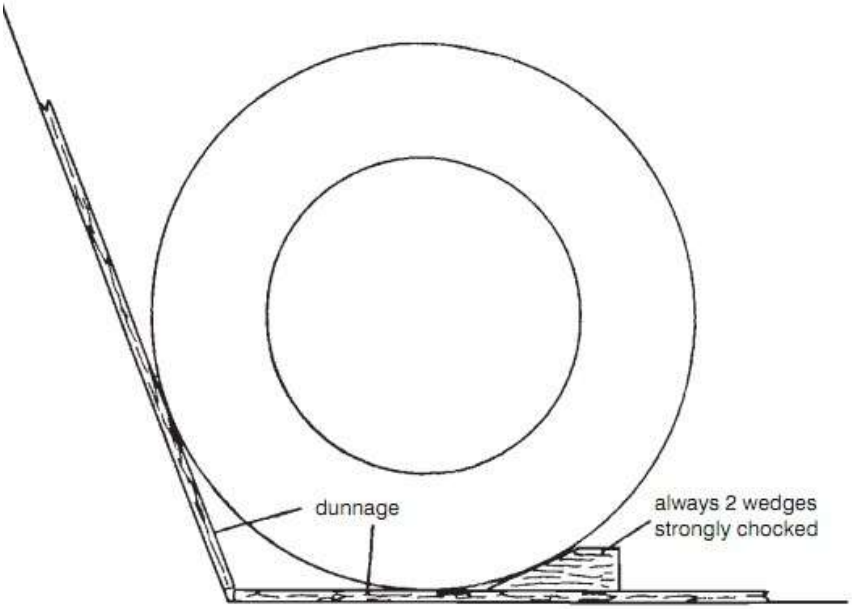

Figure 8 – *Principle of dunnaging and wedging coils*

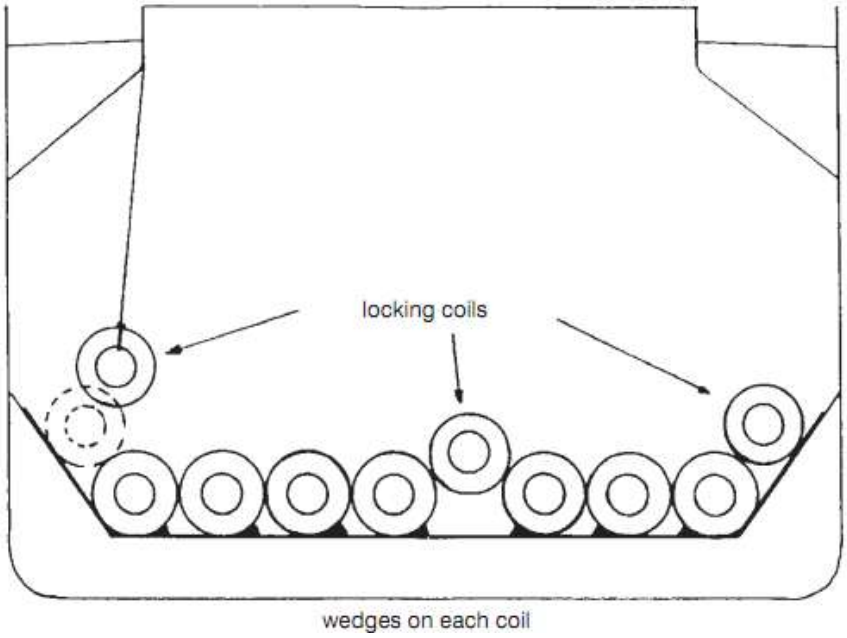

Figure 9 – *Inserting of locking coils*

2.3 The final coil in each row should normally rest on the two adjacent coils. The mass of this coil will lock the other coils in the row.

2.4 If it is necessary to load a second tier over the first, then the coils should be stowed in between the coils of the first tier (figure 9).

2.5 Any void space between coils in the topmost tier should be adequately secured (figure 10).

3 Lashings

3.1 The objective is to form one large, immovable block of coils in the hold by lashing them together. In general, strip coils in three end rows in the top tier should be lashed. To prevent fore-and-aft shifting in the top tier of bare-wound coils, group-lashing should not be applied due to their fragile nature; the end row of a top tier should be secured by dunnage and wires, which are to be tightened from side to side, and by additional wires to the bulkhead. When coils are fully loaded over the entire bottom space and are well shored, no lashings are required except for locking coils (figures 11, 12, and 13).

3.2 The lashings can be of a conventional type using wire, steel band or any equivalent means.

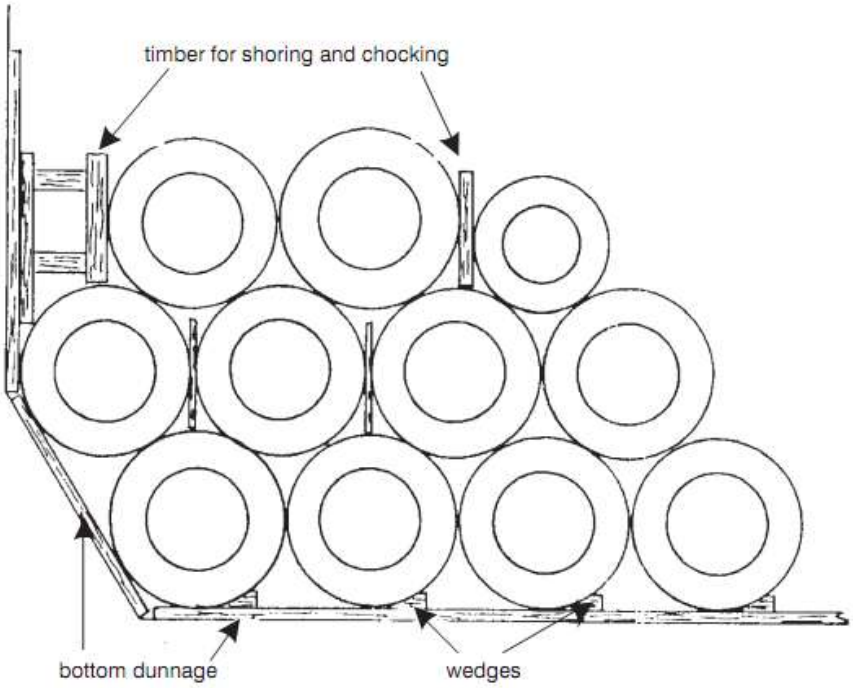

Figure 10 – *Shoring and chocking in voids between coils*

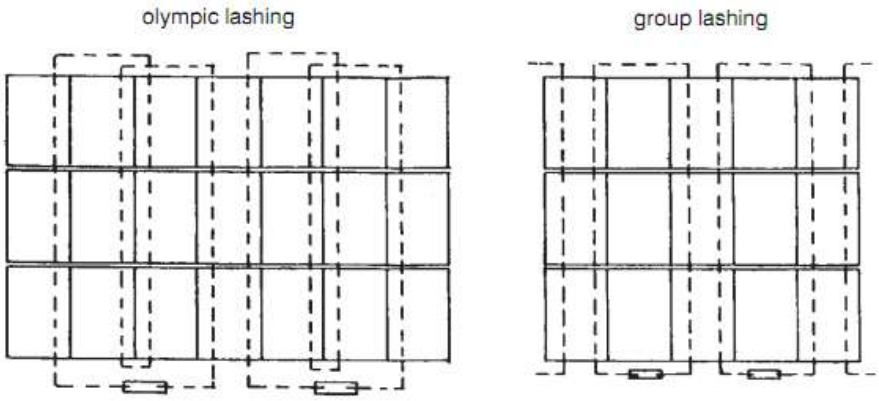

Figure 11 – *Securing of top tier against fore-and-aft shifting (view from top)*

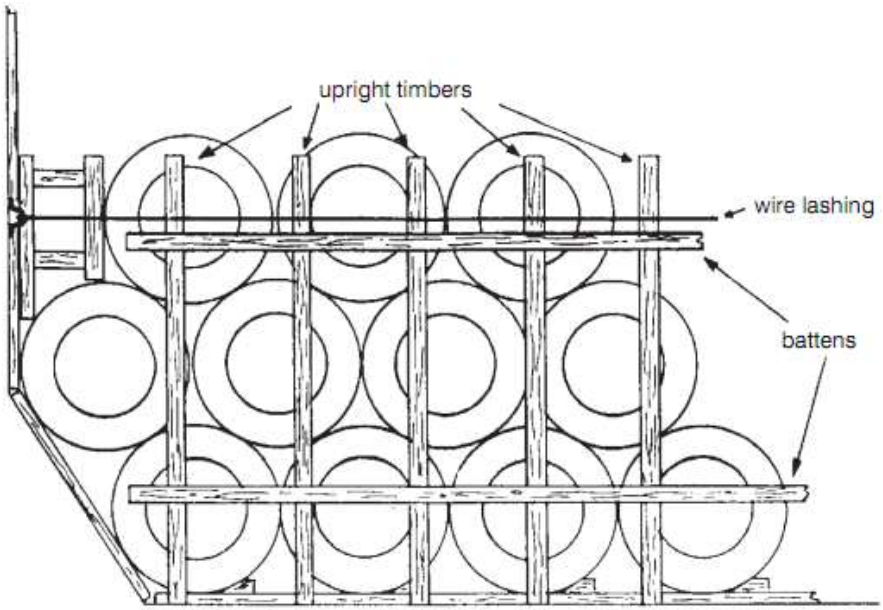

Figure 12 – *Securing of end row in top tier against fore-and-aft shifting*

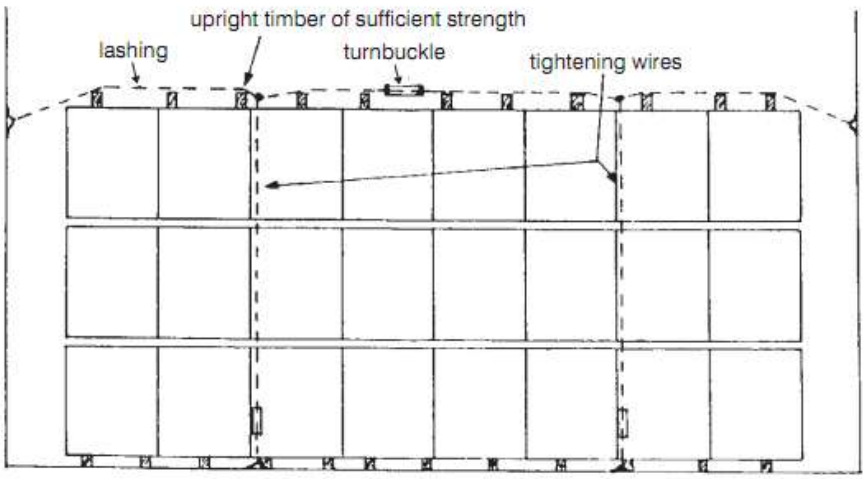

Figure 13 – *Securing of end row in top tier against fore-and-aft shifting (view from top)*

3.3 Conventional lashings should consist of wires having sufficient tensile strength. The first tier should be chocked. It should be possible to retighten the lashings during the voyage (figures 12 and 13).

3.4 Wire lashings should be protected against damage from sharp edges.

3.5 If there are few coils, or a single coil only, they should be adequately secured to the ship, by placing them in cradles, by wedging, or by shoring and then lashing to prevent transverse and longitudinal movement.

3.6 Coils carried in containers, railway wagons and road vehicles should be stowed in cradles or specially made beds and should be prevented from moving by adequate securing.

Annex 7

Safe stowage and securing of heavy metal products

1 General

1.1 Heavy metal products in the context of this Code include any heavy item made of metal, such as bars, pipes, rods, plates, wire coils, etc.

1.2 The transport of heavy metal products by sea exposes the ship to the following principal hazards:

- **.1** overstressing of the ship's structure if the permissible hull stress or permissible deck loading is exceeded;
- **.2** overstressing of the ship's structure as a result of a short roll period caused by excessive metacentric height; and
- **.3** cargo shifting because of inadequate securing resulting in a loss of stability or damage to the hull or both.

2 Recommendations

2.1 The cargo spaces in which heavy metal products are to be stowed should be clean, dry and free from grease and oil.

2.2 The cargo should be so distributed as to avoid undue hull stress.

2.3 The permissible deck and tank top loading should not be exceeded.

2.4 The following measures should be taken when stowing and securing heavy metal products:

- **.1** cargo items should be stowed compactly from one side of the ship to the other, leaving no voids between them and using timber blocks between items if necessary;
- **.2** cargo should be stowed level whenever possible and practicable;
- **.3** the surface of the cargo should be secured; and
- **.4** the shoring should be made of strong, non-splintering wood and adequately sized to withstand the acceleration forces. One shoring should be applied to every frame of the ship but at intervals of not less than 1m.

2.5 In the case of thin plates and small parcels, alternate fore-and-aft and athwartships stowage has proved satisfactory. The friction should be increased by using sufficient dry dunnage or other material between the different layers.

2.6 Pipes, rails, rolled sections, billets, etc., should be stowed in the fore-and-aft direction to avoid damage to the sides of the ship if the cargo shifts.

2.7 The cargo, and especially the topmost layer, can be secured by:

- **.1** having other cargo stowed on top of it; or
- **.2** lashing by wire, chocking off or similar means.

2.8 Whenever heavy metal products are not stowed from side to side of the ship, special care should be taken to secure such stowages adequately.

2.9 Whenever the surface of the cargo is to be secured, the lashings should be independent of each other, exert vertical pressure on the surface of the cargo, and be so positioned that no part of the cargo is unsecured.

3 Wire coils

3.1 Wire coils should be stowed flat so that each coil rests against an adjacent coil. The coils in successive tiers should be stowed so that each coil overlaps the coils below.

3.2 Wire coils should be tightly stowed together and substantial securing arrangements should be used. Where voids between coils are unavoidable or where there are voids at the sides or ends of the cargo space, the stow should be adequately secured.

3.3 When securing wire coils stowed on their sides in several layers like barrels, it is essential to remember that, unless the top layer is secured, the coils lying in the stow can be forced out of the stow by the coils below on account of the ship's motions.

Annex 8

Safe stowage and securing of anchor chains

1 General

1.1 Anchor chains for ships and offshore structures are usually carried in bundles or in continuous lengths.

1.2 Provided certain safety measures are followed prior to, during and after stowage, anchor chains may be lowered directly onto the place of stowage in bundles without further handling or stowed longitudinally either along the ship's entire cargo space or part thereof.

1.3 If the cargo plans given in the ship's documentation contain no specific requirements, the cargo should be distributed over the lower hold and 'tween-decks in such a way that stability values thus obtained will guarantee adequate stability.

2 Recommendations

2.1 Cargo spaces in which chains are stowed should be clean and free from oil and grease.

2.2 Chains should only be stowed on surfaces which are permanently covered either by wooden ceiling or by sufficient layers of dunnage or other suitable friction-increasing materials. Chains should never be stowed directly on metal surfaces.

3 Stowage and securing of chains in bundles

3.1 Chains in bundles, which are lifted directly onto their place of stowage without further handling, should be left with their lifting wires attached and should preferably be provided with additional wires around the bundles for lashing purposes.

3.2 It is not necessary to separate layers of chain with friction-increasing material such as dunnage because chain bundles will grip each other. The top layer of chain bundles should be secured to both sides of the ship by suitable lashings. Bundles may be lashed independently or in a group, using the lifting wires.

4 Stowage and securing of chains which are stowed longitudinally

4.1 Stowage of each layer of chain should, whenever possible and practicable, commence and terminate close to the ship's side. Care should be taken to achieve a tight stow.

4.2 It is not necessary to separate layers of chain with friction-increasing material such as dunnage because chain layers will grip each other.

4.3 Bearing in mind the expected weather and sea conditions, the length and nature of the voyage and the nature of the cargo to be stowed on top of the chain, the top layer of each stow should be secured by lashings of adequate strength crossing the stow at suitable intervals and thus holding down the entire stow.

Annex 9

Safe stowage and securing of metal scrap in bulk

1 Introduction

1.1 This annex deals with the stowage of metal scrap which is difficult to stow compactly because of its size, shape and mass, but does not apply to metal scrap such as metal borings, shavings or turnings, the carriage of which is addressed by the Code of Safe Practice for Solid Bulk Cargoes.

1.2 The hazards involved in transporting metal scrap include:

.1 shifting of the stow which in turn can cause a list;

.2 shifting of individual heavy pieces which can rupture the side plating below the waterline and give rise to serious flooding;

.3 excessive loading on tank tops or 'tween-decks; and

.4 violent rolling caused by excessive metacentric height.

2 Recommendations

2.1 Before loading, the lower battens of the spar ceiling should be protected by substantial dunnage to reduce damage and to prevent heavy and sharp pieces of scrap coming in contact with the ship's side plating. Air and sounding pipes, and bilge and ballast lines protected only by wooden boards, should be similarly protected.

2.2 When loading, care should be taken to ensure that the first loads are not dropped from a height which could damage the tank tops.

2.3 If light and heavy scrap is to be stowed in the same cargo space, the heavy scrap should be loaded first. Scrap should never be stowed on top of metal turnings, or similar forms of waste metal.

2.4 Scrap should be compactly and evenly stowed with no voids or unsupported faces of loosely held scrap.

2.5 Heavy pieces of scrap, which could cause damage to the side plating or end bulkheads if they were to move, should be overstowed or secured by suitable lashings. The use of shoring is unlikely to be effective because of the nature of the scrap.

2.6 Care should be taken to avoid excessive loading on tank tops and decks.

Annex 10

Safe stowage and securing of flexible intermediate bulk containers

1 Introduction

1.1 A flexible intermediate bulk container (FIBC), in the context of these guidelines, means a flexible portable packaging to be used for the transport of solids with a capacity of not more than 3m^3 (3,000 l) designed for mechanical handling and tested for its satisfactory resistance to transport and transport stresses in a one-way type or multi-purpose design.

2 Cargo information

The master should at least be provided with the following information:

.1 the total number of FIBCs and the commodity to be loaded;

.2 the dimensions of the FIBCs;

.3 the total gross mass of the FIBCs;

.4 one-way type or multi-purpose design; and

.5 the kind of hoisting (one hook or more hooks to be used).

3 Recommendations

3.1 The ideal ship for the carriage of FIBCs is one with wide hatches so that the FIBCs can be landed directly in the stowage positions without the need for shifting.

3.2 The cargo spaces should, where practicable, be rectangular in shape and free of obstructions.

3.3 The stowage space should be clean, dry and free from oil and nails.

3.4 When FIBCs have to be stowed in deep hatch wings, easy access and sufficient manoeuvring space for suitably adapted fork-lift trucks should be available.

3.5 When FIBCs are stowed in the hatchway only, the space in the wings and the forward and aft end of the cargo space should be loaded with other suitable cargo or blocked off in such a way that the FIBCs are adequately supported.

4 Stowage

4.1 The typical distribution of the accelerations of the ship should be kept in mind when FIBCs are loaded.

4.2 The width of the ship divided by the width of the FIBC will give the number of FIBCs which can be stowed athwart ships and the void space left. If there will be a void space, the stowage of the FIBCs should start from both sides to the centre, so that any void space will be in the centre of the hatchway.

4.3 FIBCs should be stowed as close as possible against each other and any void space should be chocked off.

4.4 The next layers should be stowed in a similar way so that the FIBCs fully cover the FIBCs underneath. If in this layer a void space is left, it should also be chocked off in the centre of the hatchway.

4.5 When there is sufficient room in the hatchway on top of the layers underneath to stow another layer, it should be established whether the coamings can be used as bulkheads. If not, measures should be taken to prevent the FIBCs shifting to the open space in the wings. Otherwise, the FIBCs should be stowed from one coaming to another. In both cases any void space should be in the centre and should be chocked off.

4.6 Chocking off is necessary in all cases to prevent shifting of the FIBCs to either side and to prevent a list of the ship developing in rough weather (figure 14).

5 Securing

5.1 In cases where only a part of a 'tween-deck or lower hold is used for the stowage of FIBCs, measures should be taken to prevent the FIBCs from shifting. These measures should include sufficient gratings or plywood sheets placed against the FIBCs and the use of wire lashings from side to side to secure the FIBC cargo.

5.2 The wire lashings and plywood sheets used for securing should be regularly checked, in particular before and after rough weather, and retightened if necessary.

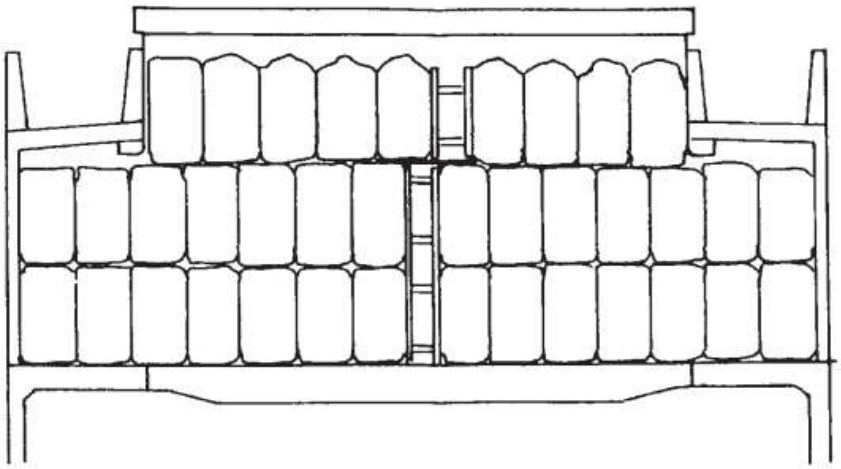

Figure 14 – *Stowage of FIBCs with chocked void spaces in the centre of the stowage area*

Annex 11

General guidelines for the under-deck stowage of logs

1 Introduction

The purpose of this annex is to recommend safe practices for the under- deck stowage of logs and other operational safety measures designed to ensure the safe transport of such cargoes.

2 Prior to loading:

.1 each cargo space configuration (length, breadth and depth), the cubic bale capacity of the respective cargo spaces, the various lengths of logs to be loaded, the cubic volume (log average), and the capacity of the gear to be used to load the logs should be determined;

.2 using the above information, a pre-stow plan should be developed to allow the maximum utilization of the available space; the better the under-deck stowage, the more cargo can safely be carried on deck;

.3 the cargo spaces and related equipment should be examined to determine whether the condition of structural members, framework and equipment could affect the safe carriage of the log cargo. Any damage discovered during such an examination should be repaired in an appropriate manner;

.4 the bilge suction screens should be examined to ensure they are clean, effective and properly maintained to prevent the admission of debris into the bilge piping system;

.5 the bilge wells should be free of extraneous material such as wood bark and wood splinters;

.6 the capacity of the bilge pumping system should be ascertained. A properly maintained and operating system is crucial for the safety of the ship. A portable dewatering pump of sufficient capacity and lift will provide additional insurance against a clogged bilge line;

.7 side sparring, pipe guards, etc., designed to protect internal hull members should be in place; and

.8 the master should ensure that the opening and closing of any high ballast dump valves are properly recorded in the ship's log. Given that such high ballast tanks are necessary to facilitate loading and bearing in mind regulation 22(1) of the International Convention on Load Lines, 1966, which requires a screw-down valve fitted in gravity overboard drain lines, the master should ensure that the dump valves are properly monitored to preclude the accidental re-admission of water into these tanks. Leaving these tanks open to the sea could lead to an apparently inexplicable list, a shift of deck cargo, and potential capsize.

3 During loading operations:

.1 each lift of logs should be hoisted aboard the ship in close proximity to the ship to

minimize any potential swinging of the lift;

.2 the possibility of damage to the ship and the safety of those who work in the cargo spaces should be considered. The logs should not be swinging when lowered into the space. The hatch coaming should be used, as necessary, to eliminate any swinging of the logs by gently resting the load against the inside of the coaming, or on it, prior to lowering;

.3 the logs should be stowed compactly, thereby eliminating as many voids as is practicable. The amount and the vertical centre of gravity of the logs stowed under deck will govern the amount of cargo that can be safely stowed on deck. In considering this principle, the heaviest logs should be loaded first into the cargo spaces;

.4 logs should generally be stowed compactly in a fore-and-aft direction, with the longer lengths towards the forward and aft areas of the space. If there is a void in the space between the fore and aft lengths, it should be filled with logs stowed athwartships so as to fill in the void across the breadth of the spaces as completely as the length of the logs permits;

.5 where the logs in the spaces can only be stowed fore-and-aft in one length, any remaining void forward or aft should be filled with logs stowed athwartships so as to fill in the void across the breadth of the space as completely as the length of the logs permits;

.6 athwartship voids should be filled tier by tier as loading progresses;

.7 butt ends of the logs should be alternately reversed to achieve a more level stowage, except where excess sheer on the inner bottom is encountered;

.8 extreme pyramiding of logs should be avoided to the greatest extent possible. If the breadth of the space is greater than the breadth of the hatch opening, pyramiding may be avoided by sliding fore-and-aft loaded logs into the ends of the port and starboard sides of the space. This sliding of logs into the ends of the port and starboard sides of the space should commence early in the loading process (after reaching a height of approximately 2m above the inner bottom) and should continue throughout the loading process;

.9 it may be necessary to use loose tackle to manoeuvre heavy logs into the under-deck areas clear of the hatchways. Blocks, purchases and other loose tackle should be attached to suitably reinforced fixtures such as eyebolts or padeyes provided for this purpose. However, if this procedure is followed, care should be taken to avoid overloading the gear;

.10 a careful watch by ship's personnel should be maintained throughout the loading to ensure no structural damage occurs. Any damage which affects the seaworthiness of the ship should be repaired;

.11 when the logs are stowed to a height of about 1 m below the forward or aft athwartship hatch coaming, the size of the lift of logs should be reduced to facilitate stowing of the remaining area; and

.12 logs in the hatch coaming area should be stowed as compactly as possible to maximum capacity.

4 After loading, the ship should be thoroughly examined to ascertain its structural condition. Bilges should be sounded to verify the ship's watertight integrity.

5 During the voyage:

.1 the ship's heeling angle and rolling period should be checked, in a seaway, on a regular basis;

.2 wedges, wastes, hammers and portable pump, if provided, should be stored in an easily accessible place; and

.3 the master or a responsible officer should ensure that it is safe to enter an enclosed cargo space by:

.3.1 ensuring that the space has been thoroughly ventilated by natural or mechanical means;

.3.2 testing the atmosphere of the space at different levels for oxygen deficiency and harmful vapour where suitable instruments are available; and

.3.3 requiring self-contained breathing apparatus to be worn by all persons entering the space where there is any doubt as to the adequacy of ventilation or testing before entry.

Fig

Annex 12

Safe stowage and securing of unit loads

1 Introduction

Unit load for the purposes of this annex means that a number of packages are either:

.1 placed or stacked, and secured by strapping, shrink-wrapping or other suitable means, on a load board such as a pallet; or

.2 placed in a protective outer packaging such as a pallet box; or

.3 permanently secured together in a sling.

Note: A single large package such as a portable tank or receptacle, intermediate bulk container or freight container is excluded from the recommendations of this annex.

2 Cargo information

The master should be provided with at least the following information:

.1 the total number of unit loads and commodity to be loaded;

.2 the type of strapping or wrapping used;

.3 the dimensions of a unit load in metres;

.4 the gross mass of a unit load in kilograms; and

.5 relevant examination certificates for pre-slung slings around cargo units. The slings should be identified by specific means, e.g. colour coding, batch numbers or otherwise.

3 Recommendations

3.1 The cargo spaces of the ship in which unit loads will be stowed should be clean, dry and free from oil and grease.

3.2 The decks, including the tank top, should be flush all over.

3.3 The cargo spaces should preferably be of a rectangular shape, horizontally and vertically. Cargo spaces of another shape in forward holds or in ’tween-decks should be transformed into a rectangular shape both athwartships and longitudinally by the use of suitable timber (figure 15).

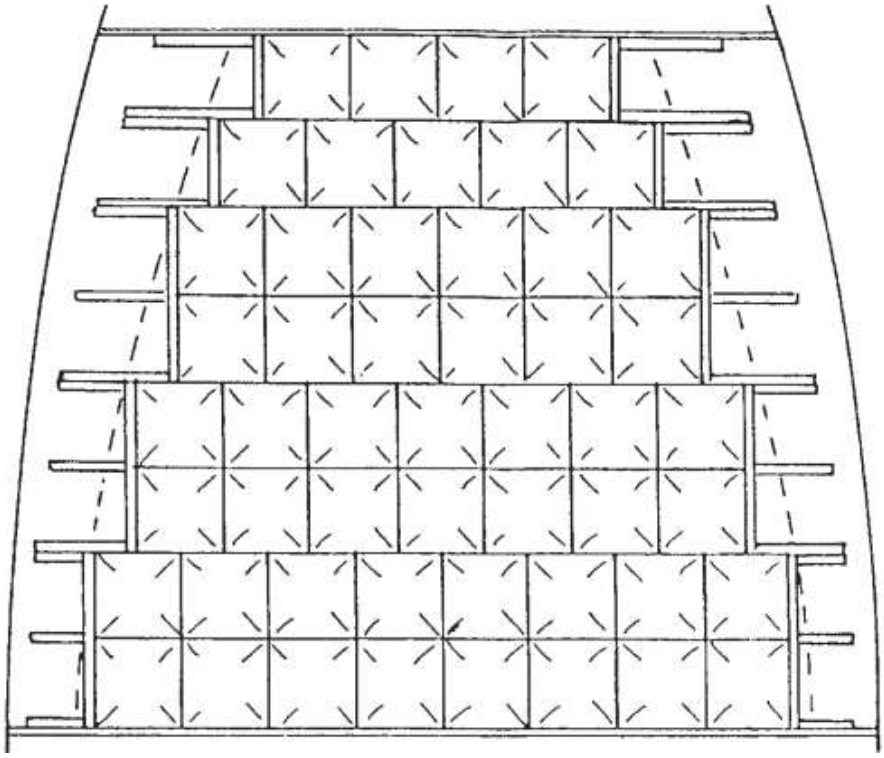

Figure 15 – *Stowage and chocking of unit loads in a tapered stowage area (view from top)*

4 Stowage

4.1 The unit loads should be stowed in such a way that securing, if needed, can be performed on all sides of the stow.

4.2 The unit loads should be stowed without any void space between the loads and the ship's sides to prevent the unit loads from racking.

4.3 When unit loads have to be stowed on top of each other, attention should be paid to the strength of pallets and the shape and the condition of the unit loads.

4.4 Precautions should be taken when unit loads are mechanically handled to avoid damaging the unit loads.

5 Securing

Block stowage should be ensured and no void space be left between the unit loads.

6 Securing when stowed athwartships

6.1 When unit loads are stowed in a lower hold or in a 'tween-deck against a bulkhead from side to side, gratings or plywood sheets should be positioned vertically against the stack of the unit loads. Wire lashings should be fitted from side to side keeping the gratings or plywood sheets tight against the stow.

6.2 Additionally, lashing wires can be fitted at different spacing from the bulkhead over the stow to the horizontally placed wire lashings in order to further tighten the stow.

7 Stowage in a wing of a cargo space and free at two sides

When unit loads are stowed in the forward or after end of a cargo space and the possibility of shifting in two directions exists, gratings or plywood sheets should be positioned vertically to the stack faces of the unit loads of the non-secured sides of the stow. Wire lashings should be taken around the stow from the wings to the bulkhead. Where the wires can damage the unit loads (particularly on the corners of the stow), gratings or plywood sheets should be positioned in such a way that no damage can occur on corners.

8 Stowage free at three sides

When unit loads are stowed against the ship's sides in such a way that shifting is possible from three sides, gratings or plywood sheets should be positioned vertically against the stack faces of the unit loads. Special attention should be paid to the corners of the stow to prevent damage to the unit loads by the wire lashings. Wire lashing at different heights should tighten the stow together with the gratings or plywood sheets at the sides (figure 16).

9 General

9.1 Instead of gratings or plywood sheets, other possibilities are the use of aluminium stanchions or battens of sufficient strength.

9.2 During the voyage the wire lashings should be regularly inspected and slack wires should be retightened if necessary. In particular, after rough weather, wire lashings should be checked and retightened if necessary.

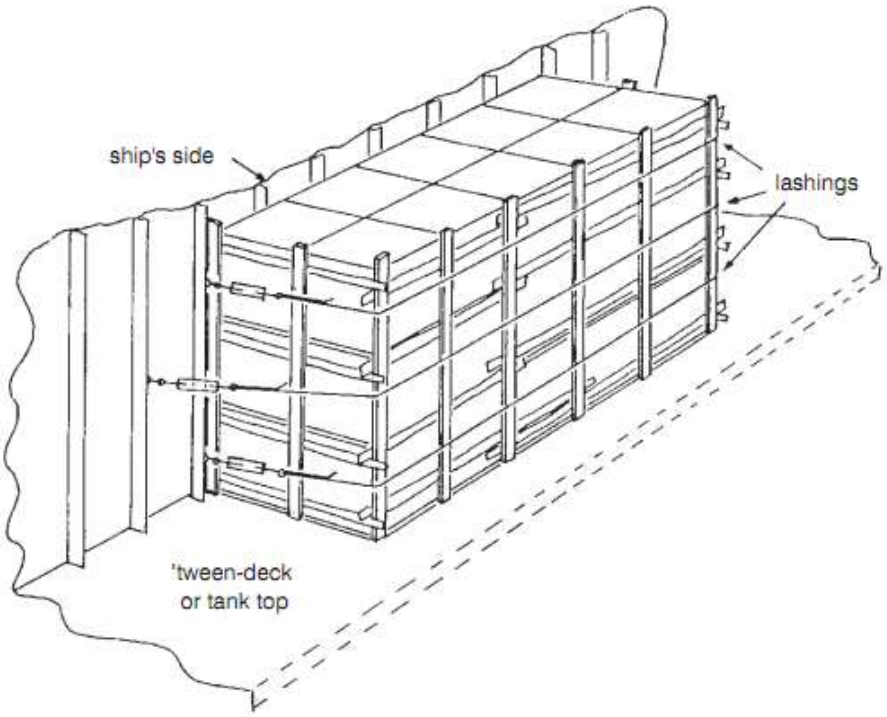

Figure 16 – *Securing of units stowed at the ship's side*

Annex 13

Methods to assess the efficiency of securing arrangements for non-standardized cargo

1 Scope of application

The methods described in this annex should be applied to non-standard- ized cargoes, but not to containers on containerships. Very heavy units as carried under the provisions of chapter 1.8 of the Code of Safe Practice for Cargo Stowage and Securing (the Code) and those items for which exhaustive advice on stowage and securing is given in the annexes to the Code should be excluded. All lashing assemblies used in the application of the methods described in this annex must be attached to fixed securing points or strong supporting structures marked on the cargo unit or advised as being suitable, or taken as a loop around the unit with both ends secured to the same side as shown in annex 5, figure 2 of the Code. Lashings going over the top of the cargo unit, which have no defined securing direction but only act to increase friction by their pre-tension, cannot be credited in the evaluation of securing arrangements under this annex.

Nothing in this annex should be read to exclude the use of computer software, provided the output achieves design parameters which meet the minimum safety factors applied in this annex.

The application of the methods described in this annex is supplementary to the principles of good seamanship and shall not replace experience in stowage and securing practice.

2 Purpose of the methods

The methods should:

.1 provide guidance for the preparation of the Cargo Securing Manual and the examples therein;

.2 assist ship's staff in assessing the securing of cargo units not covered by the Cargo Securing Manual;

.3 assist qualified shore personnel in assessing the securing of cargo units not covered by the Cargo Securing Manual; and

.4 serve as a reference for maritime and port-related education and training.

3 Presentation of the methods

The methods are presented in a universally applicable and flexible way. It is recommended that designers of Cargo Securing Manuals convert this presentation into a form suiting the particular ship, its securing equipment and the cargo carried. This form may consist of applicable diagrams, tables or calculated examples.

4 Strength of securing equipment

4.1 Manufacturers of securing equipment should at least supply information on the nominal breaking strength of the equipment in kilonewtons (kN)*.

*1 kN ≈ 100kg.

4.2 ''Maximum securing load'' (MSL) is a term used to define the load capacity for a device used to secure cargo to a ship. ''Safe Working Load'' (SWL) may be substituted for MSL for securing purposes, provided this is equal to or exceeds the strength defined by MSL.

The MSLs for different securing devices are given in table 1 if not given under 4.3.

The MSL of timber should be taken as 0.3 kN/cm² normal to the grain.

Table 1 – *Determination of MSL from breaking strength*

Material	MSL
shackles, rings, deckeyes, turnbuckles of mild steel	50% of breaking strength
fibre rope	33% of breaking strength
web lashing	50% of breaking strength
wire rope (single use)	80% of breaking strength
wire rope (re-useable)	30% of breaking strength
steel band (single use)	70% of breaking strength
chains	50% of breaking strength

4.3 For particular securing devices (e.g. fibre straps with tensioners or special equipment for securing containers), a permissible working load may be prescribed and marked by authority. This should be taken as the MSL.

4.4 When the components of a lashing device are connected in series (for example, a wire to a shackle to a deckeye), the minimum MSL in the series shall apply to that device.

5 Rule-of-thumb method

5.1 The total of the MSL values of the securing devices on each side of a unit of cargo (port as well as starboard) should equal the weight of the unit.*

5.2 This method, which implies a transverse acceleration of 1g (9.81m/s²), applies to nearly any size of ship, regardless of the location of stowage, stability and loading condition, season and area of operation. The method, however, takes into account neither the adverse effects of lashing angles and non-homogeneous distribution of forces among the securing devices nor the favourable effect of friction.

5.3 Transverse lashing angles to the deck should not be greater than 60° and it is important that adequate friction is provided by the use of suitable material.

Additional lashings at angles of greater than 60° may be desirable to prevent tipping but are not to be counted in the number of lashings under the rule-of-thumb.

*The weight of the unit should be taken in kN

6 Safety factor

When using balance calculation methods for assessing the strength of the securing devices, a safety factor is used to take account of the possibility of uneven distribution of forces among the devices or reduced capability due to the improper assembly of the devices or other reasons. This safety factor is used in the formula to derive the calculated strength (CS) from the MSL and shown in the relevant method used.

$$CS = \frac{MSL}{Safety\ Factor}$$

Notwithstanding the introduction of such a safety factor, care should be taken to use securing elements of similar material and length in order to provide a uniform elastic behaviour within the arrangement.

7 Advanced calculation method

7.1 Assumption of external forces

External forces to a cargo unit in longitudinal, transverse and vertical directions should be obtained using the formula:

where

$F_{(x,y,z)}$	=	longitudinal, transverse and vertical forces
m	=	mass of the unit
$a_{(x,y,z)}$	=	longitudinal, transverse and vertical accelerations (see table 2)
$F_{w(x,y)}$	=	longitudinal and transverse forces by wind pressure
$F_{s(x,y)}$	=	longitudinal and transverse forces by sea sloshing.

The basic acceleration data are presented in table 2.

Table 2 – *Basic acceleration data*

Transverse acceleration a_y in m/s²										Longitudinal acceleration a_x in m/s²
on deck, high	7.1	6.9	6.8	6.7	6.7	6.8	6.9	7.1	7.4	3.8
on deck, low	6.5	6.3	6.1	6.1	6.1	6.1	6.3	6.5	6.7	2.9
'tween-deck	5.9	5.6	5.5	5.4	5.4	5.5	5.6	5.9	6.2	2.0
lower hold	5.5	5.3	5.1	5.0	5.0	5.1	5.3	5.5	5.9	1.5
0	0.1	0.2	0.3	0.4	0.5	0.6	0.7	0.8	0.9	L
Vertical acceleration a_z in m/s²										
7.6	6.2	5.0	4.3	4.3	5.0	6.2	7.6	9.2		

Remarks:
The given transverse acceleration figures include components of gravity, pitch and heave parallel to the deck. The given vertical acceleration figures do not include the static weight component.
The basic acceleration data are to be considered as valid under the following operational conditions:

.1 Operation in unrestricted area;
.2 Operation during the whole year;
.3 Duration of the voyage is 25 days;
.4 Length of ship is 100 m;
.5 Service speed is 15 knots;
.6 B/GM $\geq$ 13 (B = breadth of ship, GM = metacentric height).

For operation in a restricted area, reduction of these figures may be considered, taking into account the season of the year and the duration of the voyage.

For ships of a length other than 100m and a service speed other than 15 knots, the acceleration figures should be corrected by a factor given in table 3.

Table 3 – *Correction factors for length and speed*

Speed (kn) \ Length (m)	50	60	70	80	90	100	120	140	160	180	200
9	1.20	1.09	1.00	0.92	0.85	0.79	0.70	0.63	0.57	0.53	0.49
12	1.34	1.22	1.12	1.03	0.96	0.90	0.79	0.72	0.65	0.60	0.56
15	1.49	1.36	1.24	1.15	1.07	1.00	0.89	0.80	0.73	0.68	0.63
18	1.64	1.49	1.37	1.27	1.18	1.10	0.98	0.89	0.82	0.76	0.71
21	1.78	1.62	1.49	1.38	1.29	1.21	1.08	0.98	0.90	0.83	0.78
24	1.93	1.76	1.62	1.50	1.40	1.31	1.17	1.07	0.98	0.91	0.85

For length/speed combinations not directly tabulated, the following formula may be used to obtain the correction factor with v = speed in knots and L = length between perpendiculars in metres:

correction factor = $(0.345 \cdot v/\sqrt{L}) + (58.62 \cdot L - 1034.5)L^2$

This formula shall not be used for ship lengths less than 50 m or more than 300m.

In addition, for ships with B/GM less than 13, the transverse acceleration figures should be corrected by a factor given in table 4.

Table 4 – *Correction factors for B/GM < 13*

B/GM	7	8	9	10	11	12	13 or
on deck,	1.56	1.40	1.27	1.19	1.11	1.05	1.00
high on	1.42	1.30	1.21	1.14	1.09	1.04	1.00
deck, low	1.26	1.19	1.14	1.09	1.06	1.03	1.00

The following cautions should be observed:

In the case of marked roll resonance with amplitudes above ±30°, the given figures of transverse acceleration may be exceeded. Effective measures should be taken to avoid this condition.

In the case of heading into the seas at high speed with marked slamming shocks, the given figures of longitudinal and vertical acceleration may be exceeded. An appropriate reduction of speed should be considered.

In the case of running before large stern or quartering seas with a stability which does not amply exceed the accepted minimum requirements, large roll amplitudes must be expected with transverse accelerations greater than the figures given. An appropriate change of heading should be considered.

Forces by wind and sea to cargo units above the weather deck should be accounted for by a simple approach:

force by wind pressure = 1 kN per m^2

force by sea sloshing = 1 kN per m^2

Sloshing by sea can induce forces much greater than the figure given above. This figure should be considered as remaining unavoidable after adequate measures to prevent overcoming seas.

Sea sloshing forces need only be applied to a height of deck cargo up to 2m above the weather deck or hatch top.

For voyages in a restricted area, sea sloshing forces may be neglected.

7.2 Balance of forces and moments

The balance calculation should preferably be carried out for:

– transverse sliding in port and starboard directions;
– transverse tipping in port and starboard directions;
– longitudinal sliding under conditions of reduced friction in forward and aft directions.

In the case of symmetrical securing arrangements, one appropriate calculation is sufficient.

Friction contributes towards prevention of sliding. The following friction coefficients (μ) should be applied.

Table 5 – *Friction coefficients*

Materials in contact	Friction coefficient ( )
Timber–timber, wet or dry	0.4
Steel–timber or steel–rubber	0.3
Steel–steel, dry	0.1
Steel–steel, wet	0.0

7.2.1 *Transverse sliding*

The balance calculation should meet the following condition (see also figure 1):

$$F_y \leq \mu \cdot m \cdot g + CS_1 \cdot f_1 + CS_2 \cdot f_2 + \ldots + CS_n \cdot f_n$$

where

n is the number of lashings being calculated

F_y is transverse force from load assumption (kN)

is friction coefficient

m is mass of the cargo unit (t)

g is gravity acceleration of earth = 9.81 m/s^2

CS is calculated strength of transverse securing devices (kN)

$$CS = \frac{MSL}{1:5}$$

f is a function of and the vertical securing angle (see table 6).

A vertical securing angle greater than 60◦ will reduce the effectiveness of this particular securing device in respect to sliding of the unit. Disregarding of such devices from the balance of forces should be considered, unless the necessary load is gained by the imminent tendency to tipping or by a reliable pre-tensioning of the securing device and maintaining the pre- tension throughout the voyage.

Any horizontal securing angle, i.e. deviation from the transverse direction, should not exceed 30◦, otherwise an exclusion of this securing device from the transverse sliding balance should be considered.

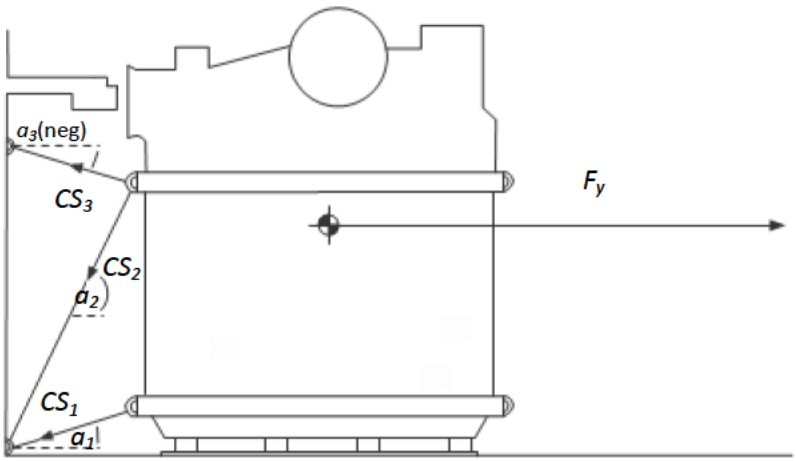

Figure 17 – *Balance of transverse forces*

Table 6 – *f Values as a function of α and μ*

	–30°	–20°	–10°	0°	10°	20°	30°	40°	50°	60°	70°	80°	90°
0.3	0.72	0.84	0.93	1.00	1.04	1.04	1.02	0.96	0.87	0.76	0.62	0.47	0.30
0.1	0.82	0.91	0.97	1.00	1.00	0.97	0.92	0.83	0.72	0.59	0.44	0.27	0.10
0.0	0.87	0.94	0.98	1.00	0.98	0.94	0.87	0.77	0.64	0.50	0.34	0.17	0.00

Remark: $f = \mu \cdot \sin\alpha + \cos\alpha$

As an alternative to using table 6 to determine the forces in a securing arrangement, the method outlined in paragraph 7.3 can be used to take account of transverse and longitudinal components of lashing forces.

7.2.2 *Transverse tipping*

This balance calculation should meet the following condition (see also figure 18):

$$F_y \cdot a \leq b \cdot m \cdot g + CS_1 \cdot c_1 + CS_2 \cdot c_2 + \ldots + CS_n \cdot c_n$$

Where

F_y, m, g, CS, n are explained under 7.2.1
a is lever-arm of tipping (m) (see figure 18)
b is lever-arm of stableness (m) (see figure 18)
c is lever-arm of securing force (m) (see figure 18)

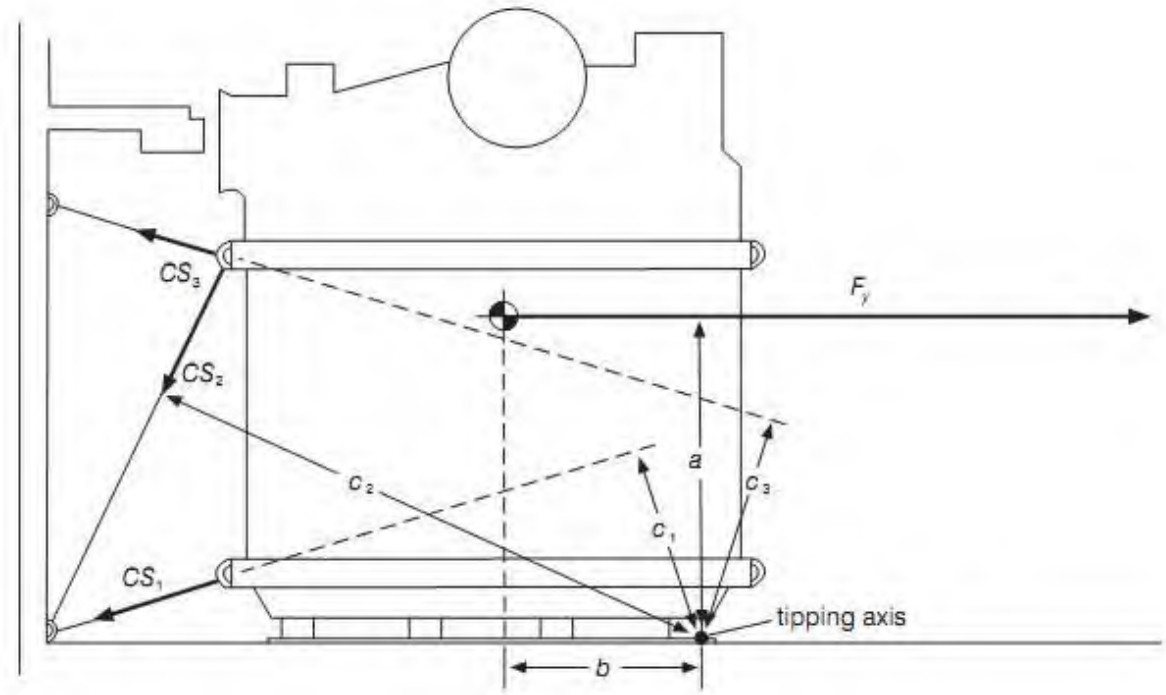

Figure 18 – *Balance of transverse moments*

7.2.3 *Longitudinal sliding*

Under normal conditions the transverse securing devices provide sufficient longitudinal components to prevent longitudinal sliding. If in doubt, a balance calculation should meet the following condition:

$$F_x \leq u \,.\, (m \,.\, g \_ F_2) + CS_1 \,.\, f_1 + CS_2 \,.\, f_2 + \ldots + CS_n \,.\, f_n$$

Where

F_X is longitudinal force from load assumption (kN)

u, m, g, f, n are as explained under 7.2.1

F_Z is vertical force from load assumption (kN)

CS is calculated strength of longitudinal securing devices kN)

$$CS = \frac{MSL}{1.5}$$

Remark: Longitudinal components of transverse securing devices should not be assumed greater than 0.5 CS.

7.2.4 *Calculated example*

A calculated example for this method is shown in appendix 1 of annex 13.

7.3 Balance of forces – alternative method

The balance of forces described in paragraph 7.2.1 and 7.2.3 will normally furnish a sufficiently accurate determination of the adequacy of the securing arrangement. However, this alternative method allows a more precise consideration of horizontal securing angles.

Securing devices usually do not have a pure longitudinal or transverse direction in practice but have an angle *β* in the horizontal plane. This horizontal securing angle *β* is defined in this annex as the angle of deviation from the transverse direction. The angle *β* is to be scaled in the quadrantal mode, i.e. between 0◦ and 90◦.

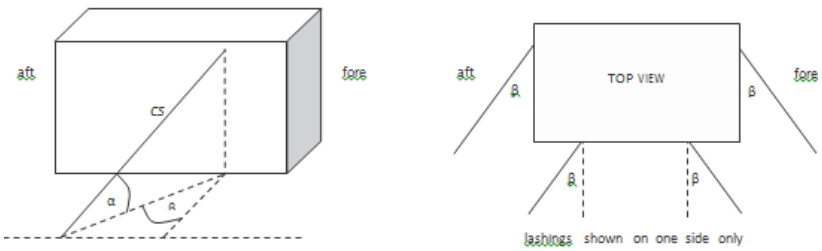

Figure 19 – *Definition of the vertical and horizontal securing angles of αand β*

A securing device with an angle *β* develops securing effects both in longitudinal and transverse direction, which can be expressed by multiplying the calculated strength *CS* with the appropriate values of f_x or f_y . The values of f_x and f_y can be obtained from table 7.

Table 7 consists of five sets of figures, one each for the friction coefficients μ = 0.4, 0.3, 0.2, 0.1

and 0. Each set of figures is obtained by using the vertical angle α and horizontal angle β. The value of f_x is obtained when entering the table with β from the right while f_y is obtained when entering with β from the left, using the nearest tabular value for α and β. Interpolation is not required but may be used.

The balance calculations are made in accordance with the following formulae:

Transverse sliding: $F_x \leq \mu \cdot m \cdot g + f_{y1} \cdot CS_1 + \ldots + f_{yn} \cdot CS_n$
Longitudinal sliding: $F_x \leq \mu \cdot (m \cdot g - F_z) + f_{x1} \cdot CS_1 + \ldots + f_{xn} \cdot CS_n$
Transverse tipping: $F_y \cdot a \leq b \cdot m \cdot g + 0.9(CS_1 \cdot c_1 + CS_2 \cdot c_2 + \ldots + CS_n \cdot c_n)$

Caution:

Securing devices which have a vertical angle α of less than 45◦ in combination with horizontal angle β greater than 45◦ should not be used in the balance of transverse tipping in the above formula.

All symbols used in these formulae have the same meaning as defined in paragraph 7.2 except f_y and f_x , obtained from table 7, and *CS* is as follows:

$$CS = 1.35 \frac{MSL}{}$$

A calculated example for this method is shown in appendix 1 of annex 13.

Table 7 – *f_x values and f_y values as a function of α, β and μ*

Table 7.1 for μ = 0.4

β for f_y	α														β for f_x
	-30	**-20**	**-10**	**0**	**10**	**20**	**30**	**40**	**45**	**50**	**60**	**70**	**80**	**90**	
0	0.67	0.80	0.92	1.00	1.05	1.08	1.07	1.02	0.99	0.95	0.85	0.72	0.57	0.40	**90**
10	0.65	0.79	0.90	0.98	1.04	1.06	1.05	1.01	0.98	0.94	0.84	0.71	0.56	0.40	**80**
20	0.61	0.75	0.86	0.94	0.99	1.02	1.01	0.98	0.95	0.91	0.82	0.70	0.56	0.40	**70**
30	0.55	0.68	0.78	0.87	0.92	0.95	0.95	0.92	0.90	0.86	0.78	0.67	0.54	0.40	**60**
40	0.46	0.58	0.68	0.77	0.82	0.86	0.86	0.84	0.82	0.80	0.73	0.64	0.53	0.40	**50**
50	0.36	0.47	0.56	0.64	0.70	0.74	0.76	0.75	0.74	0.72	0.67	0.60	0.51	0.40	**40**
60	0.23	0.33	0.42	0.50	0.56	0.61	0.63	0.64	0.64	0.63	0.60	0.55	0.48	0.40	**30**
70	0.10	0.18	0.27	0.34	0.41	0.46	0.50	0.52	0.52	0.53	0.52	0.49	0.45	0.40	**20**
80	-0.05	0.03	0.10	0.17	0.24	0.30	0.35	0.39	0.41	0.42	0.43	0.44	0.42	0.40	**10**
90	-0.20	-0.14	-0.07	0.00	0.07	0.14	0.20	0.26	0.28	0.31	0.35	0.38	0.39	0.40	**0**

Table 7.2 for μ = 0.3

β for f_y	α														β for f_x
	−30	**−20**	**−10**	**0**	**10**	**20**	**30**	**40**	**45**	**50**	**60**	**70**	**80**	**90**	
0	0.72	0.84	0.93	1.00	1.04	1.04	1.02	0.96	0.92	0.87	0.76	0.62	0.47	0.30	**90**
10	0.70	0.82	0.92	0.98	1.02	1.03	1.00	0.95	0.91	0.86	0.75	0.62	0.47	0.30	**80**
20	0.66	0.78	0.87	0.94	0.98	0.99	0.96	0.91	0.88	0.83	0.73	0.60	0.46	0.30	**70**
30	0.60	0.71	0.80	0.87	0.90	0.92	0.90	0.86	0.82	0.79	0.69	0.58	0.45	0.30	**60**
40	0.51	0.62	0.70	0.77	0.81	0.82	0.81	0.78	0.75	0.72	0.64	0.54	0.43	0.30	**50**
50	0.41	0.50	0.58	0.64	0.69	0.71	0.71	0.69	0.67	0.64	0.58	0.50	0.41	0.30	**40**
60	0.28	0.37	0.44	0.50	0.54	0.57	0.58	0.58	0.57	0.55	0.51	0.45	0.38	0.30	**30**
70	0.15	0.22	0.28	0.34	0.39	0.42	0.45	0.45	0.45	0.45	0.43	0.40	0.35	0.30	**20**
80	0.00	0.06	0.12	0.17	0.22	0.27	0.30	0.33	0.33	0.34	0.35	0.34	0.33	0.30	**10**
90	−0.15	−0.10	−0.05	0.00	0.05	0.10	0.15	0.19	0.21	0.23	0.26	0.28	0.30	0.30	**0**

Table 7.3 for μ = 0.2

β for f_y	α														β for f_x
	−30	**−20**	**−10**	**0**	**10**	**20**	**30**	**40**	**45**	**50**	**60**	**70**	**80**	**90**	
0	0.77	0.87	0.95	1.00	1.02	1.01	0.97	0.89	0.85	0.80	0.67	0.53	0.37	0.20	**90**
10	0.75	0.86	0.94	0.98	1.00	0.99	0.95	0.88	0.84	0.79	0.67	0.52	0.37	0.20	**80**
20	0.71	0.81	0.89	0.94	0.96	0.95	0.91	0.85	0.81	0.76	0.64	0.51	0.36	0.20	**70**
30	0.65	0.75	0.82	0.87	0.89	0.88	0.85	0.79	0.75	0.71	0.61	0.48	0.35	0.20	**60**
40	0.56	0.65	0.72	0.77	0.79	0.79	0.76	0.72	0.68	0.65	0.56	0.45	0.33	0.20	**50**
50	0.46	0.54	0.60	0.64	0.67	0.67	0.66	0.62	0.60	0.57	0.49	0.41	0.31	0.20	**40**
60	0.33	0.40	0.46	0.50	0.53	0.54	0.53	0.51	0.49	0.47	0.42	0.36	0.28	0.20	**30**
70	0.20	0.25	0.30	0.34	0.37	0.39	0.40	0.39	0.38	0.37	0.34	0.30	0.26	0.20	**20**
80	0.05	0.09	0.14	0.17	0.21	0.23	0.25	0.26	0.26	0.26	0.26	0.25	0.23	0.20	**10**
90	−0.10	−0.07	−0.03	0.00	0.03	0.07	0.10	0.13	0.14	0.15	0.17	0.19	0.20	0.20	**0**

Table 7.4 for μ = 0.1

β for f_y	α														β for f_x
	−30	**−20**	**−10**	**0**	**10**	**20**	**30**	**40**	**45**	**50**	**60**	**70**	**80**	**90**	
0	0.82	0.91	0.97	1.00	1.00	0.97	0.92	0.83	0.78	0.72	0.59	0.44	0.27	0.10	**90**
10	0.80	0.89	0.95	0.98	0.99	0.96	0.90	0.82	0.77	0.71	0.58	0.43	0.27	0.10	**80**
20	0.76	0.85	0.91	0.94	0.94	0.92	0.86	0.78	0.74	0.68	0.56	0.42	0.26	0.10	**70**
30	0.70	0.78	0.84	0.87	0.87	0.85	0.80	0.73	0.68	0.63	0.52	0.39	0.25	0.10	**60**
40	0.61	0.69	0.74	0.77	0.77	0.75	0.71	0.65	0.61	0.57	0.47	0.36	0.23	0.10	**50**
50	0.51	0.57	0.62	0.64	0.65	0.64	0.61	0.56	0.53	0.49	0.41	0.31	0.21	0.10	**40**
60	0.38	0.44	0.48	0.50	0.51	0.50	0.48	0.45	0.42	0.40	0.34	0.26	0.19	0.10	**30**
70	0.25	0.29	0.32	0.34	0.35	0.36	0.35	0.33	0.31	0.30	0.26	0.21	0.16	0.10	**20**
80	0.10	0.13	0.15	0.17	0.19	0.20	0.20	0.20	0.19	0.19	0.17	0.15	0.13	0.10	**10**
90	−0.05	−0.03	−0.02	0.00	0.02	0.03	0.05	0.06	0.07	0.08	0.09	0.09	0.10	0.10	**0**

Table 7.5 for μ =0.0

β for f_y	α														β for f_x
	−30	**−20**	**−10**	**0**	**10**	**20**	**30**	**40**	**45**	**50**	**60**	**70**	**80**	**90**	
0	0.87	0.94	0.98	1.00	0.98	0.94	0.87	0.77	0.71	0.64	0.50	0.34	0.17	0.00	**90**
10	0.85	0.93	0.97	0.98	0.97	0.93	0.85	0.75	0.70	0.63	0.49	0.34	0.17	0.00	**80**
20	0.81	0.88	0.93	0.94	0.93	0.88	0.81	0.72	0.66	0.60	0.47	0.32	0.16	0.00	**70**
30	0.75	0.81	0.85	0.87	0.85	0.81	0.75	0.66	0.61	0.56	0.43	0.30	0.15	0.00	**60**
40	0.66	0.72	0.75	0.77	0.75	0.72	0.66	0.59	0.54	0.49	0.38	0.26	0.13	0.00	**50**
50	0.56	0.60	0.63	0.64	0.63	0.60	0.56	0.49	0.45	0.41	0.32	0.22	0.11	0.00	**40**
60	0.43	0.47	0.49	0.50	0.49	0.47	0.43	0.38	0.35	0.32	0.25	0.17	0.09	0.00	**30**
70	0.30	0.32	0.34	0.34	0.34	0.32	0.30	0.26	0.24	0.22	0.17	0.12	0.06	0.00	**20**
80	0.15	0.16	0.17	0.17	0.17	0.16	0.15	0.13	0.12	0.11	0.09	0.06	0.03	0.00	**10**
90	0.00	0.00	0.00	0.00	0.00	0.00	0.00	0.00	0.00	0.00	0.00	0.00	0.00	0.00	**0**

Remark: $f_y = \cos\alpha \cdot \cos\beta + \mu \cdot \sin\alpha$ $f_x = \cos\alpha \cdot \sin\beta + \mu \cdot \sin\alpha$

Appendix 1 of annex 13

Calculated example 1

(refer to paragraph 7.2, Balance of forces and moments)

Ship: L = 120 m; B = 20 m; GM = 1.4 m; speed = 15 knots
Cargo: m = 62 t; dimensions = 6 x 4 x 4 m; stowage at 0.7L on deck, low

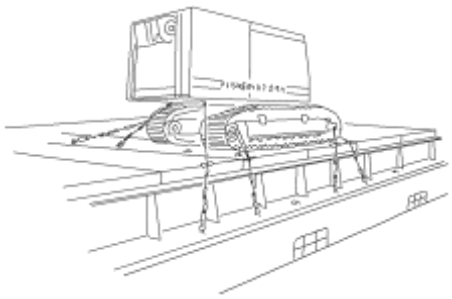

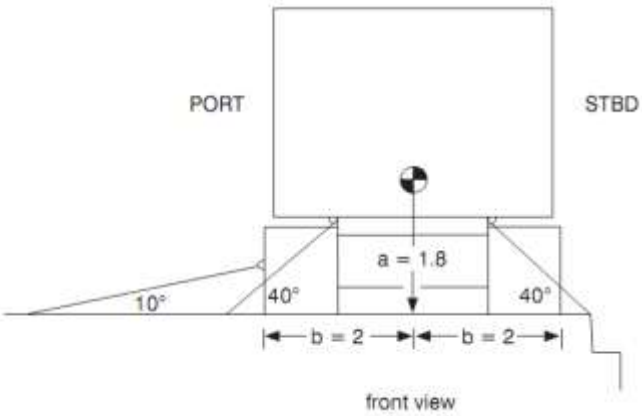

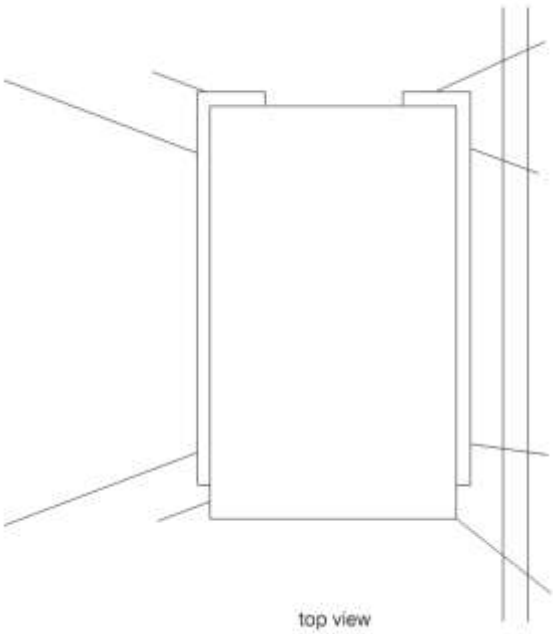

Securing material:

wire rope:. . . . . breaking strength =125 kN; MSL = 100 kN

shackles, turnbuckles, deck rings: breaking strength = 180 kN; MSL = 90 kN

stowage on dunnage boards: . . . . . $\mu = 0.3$; $CS = 90/1.5 = 60$ kN

Securing arrangement:

side	n	CS	α	f	c
STBD	4	60 kN	40°	0.96	–
PORT	2	60 kN	40°	0.96	–
PORT	2	60 kN	10°	1.04	–

External forces:

$F_x = 2.9 \times 0.89 \times 62 + 16 + 8 = 184$ kN
$F_y = 6.3 \times 0.89 \times 62 + 24 + 12 = 384$ kN
$F_z = 6.2 \times 0.89 \times 62 = 342$ kN

Balance of forces (STBD arrangement):

$384 < 0.3 \times 62 \times 9.81 + 4 \times 60 \times 0.96$
$384 < 412$ this is OK!

Balance of forces (PORT arrangement):

$384 < 0.3 \times 62 \times 9.81 + 2 \times 60 \times 0.96 + 2 \times 60 \times 1.04$
$384 < 422$ this is OK!

Balance of moments:

$384 \ 1.8 < 2 \times 62 \times 9.81$
$691 < 1216$ no tipping, even without lashings!

Calculated example 2

(refer to paragraph 7.3, Balance of forces – alternative method)

A cargo unit of 68 t mass is stowed on timber (μ = 0.3) in the 'tween deck at 0.7L of a vessel. L = 160 m, B = 24 m, v = 18 kn and GM = 1.5 m. Dimensions of the cargo unit are height = 2.4 m and width = 1.8 m. The external forces are: F_x = 112 kN, F_y = 312 kN, F_z = 346 kN.

The top view shows the overall securing arrangement with eight lashings.

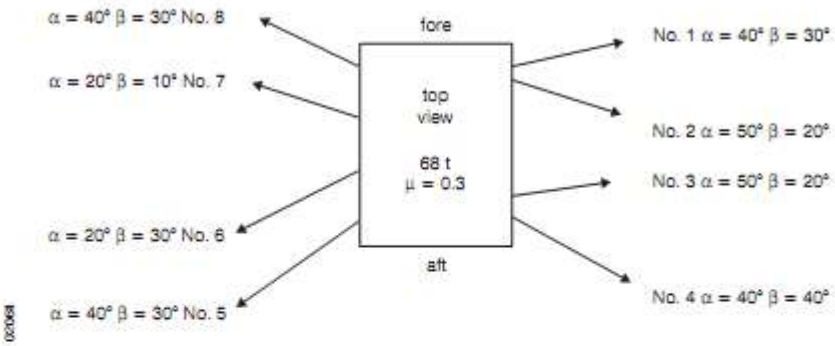

Calculation of balance of forces:

No.	MSL (kN)	CS (kN)	α	β	f_y	$CS \times f_y$	f_x	$CS \times f_x$
1	108	80	40° stbd	30° fwd	0.86	68.8 stbd	0.58	46.4 fwd
2	90	67	50° stbd	20° aft	0.83	55.6 stbd	0.45	30.2 aft
3	90	67	50° stbd	20° fwd	0.83	55.6 stbd	0.45	30.2 fwd
4	108	80	40° stbd	40° aft	0.78	62.4 stbd	0.69	55.2 aft
5	108	80	40° port	30° aft	0.86	68.8 port	0.58	46.4 aft
6	90	67	20° port	30° aft	0.99	66.3 port	0.57	38.2 aft
7	90	67	20° port	10° fwd	1.03	69.0 port	0.27	18.1 fwd
8	108	80	40° port	30° fwd	0.86	68.8 port	0.58	46.4 fwd

Transverse balance of forces (STBD arrangement) Nos. 1, 2, 3 and 4:

$312 < 0.3 \times 68 \times 9.81 + 68.8 + 55.6 + 55.6 + 62.4$
$312 < 443$ this is OK !

Transverse balance of forces (PORT arrangement) Nos. 5, 6, 7 and 8:

$312 < 0.3 \times 68 \times 9.81 + 68.8 + 66.3 + 69.0 + 68.8$
$312 < 473$ this is OK!

Longitudinal balance of forces (FWD arrangement) Nos. 1, 3, 7, 8:

$112 < 0.3(68 \times 9.81 - 346) + 46.4 + 30.2 + 18.1 + 46.4$
$112 < 237$ this is OK !

Longitudinal balance of forces (AFT arrangement) Nos. 2, 4, 5, 6:

$112 < 0.3(68 \times 9.81 - 346) + 30.2 + 55.2 + 46.4 + 38.2$
$112 < 266$ this is OK!

Transverse tipping

Unless specific information is provided, the vertical centre of gravity of the cargo unit can be assumed to be at one half the height and the transverse centre of gravity at one half the width. Also, if the lashing is connected as shown in the sketch, instead of measuring c, the length of the lever from the tipping axis to the lashing CS, it is conservative to assume that it is equal to the width of the cargo unit.

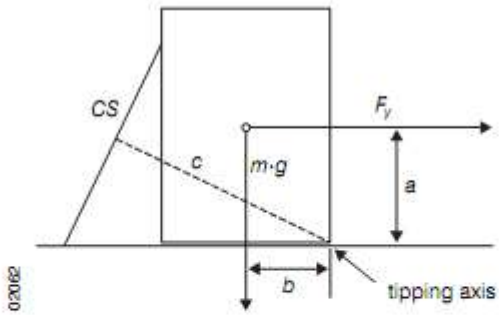

$$F_y \cdot a \leq b \cdot m \cdot g + 0.9 \cdot (CS_1 \cdot c_1 + CS_2 \cdot c_2 + CS_3 \cdot c_3 + CS_4 \cdot c_4)$$

$$312 \times 2.4/2 < 1.8/2 \times 68 \times 9.81 + 0.9 \times 1.8 \times (80 + 67 + 67 + 80)$$

$$374 < 600 + 476$$

$$374 < 1076 \qquad \text{this is OK!}$$

Appendix 2 of annex 13

Explanations and interpretation of ‘‘Methods to assess the efficiency of securing arrangements for non-standardized cargo’’

1 The exclusion of very heavy units as carried under the provisions of paragraph 1.8 of chapter 1 of the Code from the scope of application of the methods should be understood to accommodate the possibility of adapting the stowage and securing of such units to specifically determined weather conditions and sea conditions during transport. The exclusion should not be understood as being a restriction of the methods to units up to a certain mass or dimension.

2 The acceleration figures given in table 2, in combination with the correction factors, represent peak values on a 25-day voyage. This does not imply that peak values in x, y and z directions occur simultaneously with the same probability. It can be generally assumed that peak values in the transverse direction will appear in combination with less than 60% of the peak values in longitudinal and vertical directions.

Peak values in longitudinal and vertical directions may be associated more closely because they have the common source of pitching and heaving.

3 The advanced calculation method uses the ‘‘worst case approach’’. That is expressed clearly by the transverse acceleration figures, which increase to forward and aft in the ship and thereby show the influence of transverse components of simultaneous vertical accelerations. Consequently there is no need to consider vertical accelerations separately in the balances of transverse forces and moments. These simultaneously acting vertical accelerations create an apparent increase of weight of the unit and thus increase the effect of the friction in the balance of forces and the moment of stableness in the balance of moments. For this reason there is no reduction of the force $m \cdot g$ normal to the deck due to the presence of an angle of heel.

The situation is different for the longitudinal sliding balance. The worst case would be a peak value of the longitudinal force F_x accompanied by an extreme reduction of weight through the vertical force F_z .

4 The friction coefficients shown in the methods are somewhat reduced against appropriate figures in other publications. The reason for this should be seen in various influences which may appear in practical shipping, as: moisture, grease, oil, dust and other residues, vibration of the ship.

There are certain stowage materials available which are said to increase friction considerably. Extended experience with these materials may bring additional coefficients into practical use.

5 The principal way of calculating forces within the securing elements of a complex securing arrangement should necessarily include the consideration of:

– load–elongation behaviour (elasticity),
– geometrical arrangement (angles, length),
– pre-tension

of each individual securing element.

This approach would require a large volume of information and a complex, iterative calculation. The results would still be doubtful due to uncertain parameters.

Therefore the simplified approach was chosen with the assumption that the elements take an even load of *CS* (calculated strength) which is reduced against the MSL (maximum securing load) by the safety factor.

6 When employing the advanced calculation method, the way of collecting data should be followed as shown in the calculated example. It is acceptable to estimate securing angles, to take average angles for a set of lashings and similarly to arrive at reasonable figures of the levers *a*, *b* and *c* for the balance of moments.

It should be borne in mind that meeting or missing the balance calculation just by a tiny change of one or the other parameters indicates to be near the limit anyway. There is no clear-cut borderline between safety and non-safety. If in doubt, the arrangement should be improved.

Note on annex 14

Member Governments are invited to bring the amendments to the CSS Code (annex 14) to the attention of shipowners, ship operators, shipmasters and crews and all other parties concerned and, in particular, encourage shipowners and terminal operators to:

.1 apply the amendments on their entirety for containerships, the keels of which were laid or which are at a similar stage of construction **on or after 1 January 2015**;

.2 apply sections 4.4, 7.1, 7.3 and 8 to existing containerships, the keels of which were laid or which are at a similar stage of construction **before 1 January 2015**; and

.3 apply the principles of this guidance contained in section 6 and 7.2 **to existing containerships** as far as practical by flag State Administration with the understanding that existing ships would not be required to be enlarged or undergo other major structural modification as determined.

Annex 14

Guidance on providing safe working conditions for securing of containers on deck

1 Aim

To ensure that persons engaged in carrying out container securing operations on deck have safe working conditions and, in particular safe access, appropriate securing equipment and safe places of work. These guidelines should be taken into account at the design stage when securing systems are devised. These guidelines provide shipowners, ship builders, classification societies, Administrations and ship designers with guidance on producing or authorizing a Cargo Safe Access Plan (CSAP).

2 Scope

Ships which are specifically designed and fitted for the purpose of carrying containers on deck.

3 Definitions

3.1 *Administration* means the Government of the State whose flag the ship is entitled to fly.

3.2 *Fencing* is a generic term for guardrails, safety rails, safety barriers and similar structures that provide protection against the falls of persons.

3.3 *Lashing positions* include positions:

- **.1** in between container stows on hatch covers;
- **.2** at the end of hatches;
- **.3** on outboard lashing stanchions/pedestals;
- **.4** outboard lashing positions on hatch covers; and
- **.5** any other position where people work with container securing.

3.4 *SATLs* are semi-automatic twistlocks.

3.5 *Securing* includes lashing and unlashing.

3.6 *Stringers* are the uprights or sides of a ladder.

3.7 *Turnbuckles and lashing rods** include similar cargo securing devices.

4 General

4.1 Introduction

4.1.1 Injuries to dockworkers on board visiting ships account for the majority of accidents that occur within container ports, with the most common activity that involves such injuries being the

lashing/unlashing of deck containers. Ship's crew engaged in securing operations face similar dangers.

4.1.2 During the design and construction of containerships the provision of a safe place of work for lashing personnel is essential.

4.1.3 Containership owners and designers are reminded of the dangers associated with container securing operations and are urged to develop and us container securing systems which are safe by design. The aim should be to eliminate or at least minimize the need for:

.1 container top work;

.2 work in other equally hazardous locations; and

.3 the use of heavy and difficult to handle securing equipment.

4.1.4 It should be borne in mind that providing safe working conditions for securing containers deals with matters relating to design, operation, and maintenance, and that the problems on large containerships are not the same as on smaller ones.

4.2 Revised Recommendations on safety of personnel during container securing operations (MSC.1/Circ.1263)

Shipowners, ship designers and Administrations should take into account the recommendations on safe design of securing arrangements contained in these guidelines and in Recommendations on safety of personnel during container securing operations (MSC.1/1263)

4.3 Cargo Safe Access Plan (CSAP)

4.3.1 The Guidelines for the preparation of the Cargo Securing Manual (MSC/Circ.745) requires ships which are specifically designed and fitted for the purpose of carrying containers to have an approved Cargo Safe Access Plan (CSAP) on board, for all areas where containers are secured.

4.3.2 Stakeholders, including, but not limited to shipowners, ship designers, ship builders, Administrations, classification societies and lashing equipment manufacturers, should be involved at an early stage in the design of securing arrangements on containerships and in the development of the CSAP.

4.3.3 The CSAP should be developed at the design stage in accordance with chapter 5 of the annex to MSC.1/Circ. 1353.

*Refer to standard ISO 3874, Annex D Lashing rod systems and tensioning devices.

4.3.4 Designers should incorporate the recommendations of this annex into the CSAP so that safe working conditions can be maintained during all anticipated configurations of container stowage.

4.4 Training and familiarization

4.4.1 Personnel engaged in cargo securing operations should be trained in the lashing and unlashing of containers as necessary to carry out their duties in a safe manner. This should include the different types of lashing equipment that are expected to be used.

4.4.2 Personnel engaged in cargo securing operations should be trained in the identification and handling of bad order or defective securing gear in accordance with each ship's procedures to ensure damaged gear is segregated for repair and maintenance or disposal.

4.4.3 Personnel engaged in cargo securing operations should be trained to develop the knowledge and mental and physical manual handling skills that they require to do their job safely and efficiently, and to develop general safety awareness to recognize and avoid potential dangers.

4.4.4 Personnel should be trained in safe systems of work. Where personnel are involved in working at heights, they should be trained in the use of relevant equipment. Where practical, the use of fall protection equipment should take precedence over fall arrest systems.

4.4.5 Personnel who are required to handle thermal cables and/or connect and disconnect temperature control units should be given training in recognizing defective cables, receptacles and plugs.

4.4.6 Personnel engaged in containership cargo operations should be familiarized with the ship's unique characteristics and potential hazards arising from such operations necessary to carry out their duties.

5 Responsibilities of involved parties

5.1 Administrations should ensure that:

.1 Lashing plans contained within the approved Cargo Securing Manual are compatible with the current design of the ship and the intended container securing method is both safe and physically possible;

.2 the Cargo Securing Manual, lashing plans and the CSAP are kept up to date; and

.3 lashing plans and the CSAP are compatible with the design of the vessel and the equipment available.

5.2 Shipowners and operators should ensure that:

.1 portable cargo securing devices are certified and assigned with a maximum securing load (MSL). The MSL should be documented in the cargo securing manual as required by the CSS Code;

.2 the operational recommendations of this annex are complied with;

.3 correction, changes or amendments of the Cargo Securing Manual, lashing plans and the Cargo Safe Access Plan (CSAP) should be promptly sent to the competent authority for approval; and

.4 only compatible and certified equipment in safe condition is used.

5.3 Designers should follow design recommendations of these guidelines.

5.4 Shipbuilders should follow design recommendations of these guidelines.

5.5 Containership terminal operators should ensure that the recommendations of relevant parts of this annex are complied with.

6. Design

6.1 General design considerations

6.1.1 *Risk assessment*

6.1.1.1 Risk assessments should be performed at the design stage taking into account the recommendations of this annex to ensure that securing operations can be safely carried out in all anticipated container configurations. This assessment should be conducted with a view toward developing the Cargo Safe Access Plan (CSAP). Hazards to be assessed should include but not be limited to:

.1 slips, trips and falls;

.2 falls from height;

.3 injuries whilst manually handling lashing gear;

.4 being struck by falling lashing gear or other objects;

.5 potential damage due to container operations. High-risk areas should be identified in order to develop appropriate protection or other methods of preventing significant damage.

.6 adjacent electrical risks (temperature controlled unit cable connections, etc.);

.7 the adequacy of the access to all areas that is necessary to safely perform container securing operations;

.8 ergonomics (e.g., size and weight of equipment) of handling lashing equipment; and

.9 implications of lashing 9'6" high, or higher, containers and mixed stows of 40' and 45' containers.

6.1.1.2 Shipbuilders should collaborate with designers of securing equipment in conducting risk assessments and ensure that the following basic criteria are adhered to when building containerships.

6.1.2 Ship designers should ensure that container securing operations performed in the outer positions can be accomplished safely. As a minimum, a platform should be provided on which to work
safely. This platform should have fencing to prevent workers falling off it.

6.1.3 The space provided between the container stows for workers to carry out lashing operations should provide:

.1 a firm and level working surface;

.2 a working area, excluding lashings in place, to provide a clear sight of twist lock handles and allow for the manipulation of lashing gear;

.3 sufficient spaces to permit the lashing gear and other equipment to be stowed without causing a tripping hazard;

.4 sufficient spaces between the fixing points of the lashing bars on deck, or on the hatch covers, to tighten the turnbuckles.

.5 access in the form of ladders on hatch coamings;

.6 safe access to lashing platforms;

.7 protective fencing on lashing platforms; and

.8 adequate lighting in line with these guidelines.

6.1.4 Ship designers should aim to eliminate the need to access and work on the tops of deck stows.

6.1.5 Platforms should be designed to provide a clear work area, unencumbered by deck piping and other obstructions and take into consideration:

.1 containers must be capable of being stowed within safe reach of the workers using the platform; and

.2 the work area size and the size of the securing components used.

6.2 Provisions for safe access

6.2.1 *General provisions*

6.2.1.1 The minimum clearance for transit areas should be at least 2m high and 600mm wide.

6.2.1.2 All relevant deck surfaces used for movement about the ship and all passageways and stairs should have non-slip surfaces.

6.2.1.3 Where necessary for safety, walkways on deck should be delineated by painted lines or otherwise marked with pictorial signs.

6.2.1.4 All protrusions in access ways, such as cleats, ribs and brackets that may give rise to a trip hazard should be highlighted in a contrasting colour.

6.2.2 *Lashing position design (platforms, bridges and other lashing positions)*

6.2.2.1 Lashing positions should be designed to eliminate the use of three high lashing bars and be positioned in close proximity to lashing equipment stowage areas. Lashing positions should be designed to provide a clear work area which is unencumbered by deck piping and other obstructions and take into consideration:

.1 the need for containers to be stowed within safe reach if the personnel using the lashing position so that the horizontal operating distance from the securing point to the container does not exceed 1,100mm and not less than 220mm for lashing bridges and 130mm for other positions.

.2 the size of the working area and the movement of the lashing personnel; and

.3 the length and weight of the lashing gear and securing components used.

6.2.2.2 The width of the lashing positions should preferably be 1,000mm, but not less than 750mm.

6.2.2.3 The width of permanent lashing bridges should be:

.1 750mm between top rails of fencing; and

.2 a clear minimum of 600mm between storage racks, lashing cleats and any other obstruction.

6.2.2.4 Platforms on the ends of hatches and outboard lashing stations should preferably be at the same level as the top of the hatch covers.

6.2.2.5 Toe boards (or kick plates) should be provided around the sides of elevated lashing bridges and platforms to prevent securing equipment from falling and injuring people. Toe boards should preferably be 150mm high; however, where this is not possible they should be at least 100mm high.

6.2.2.6 Any openings in the lashing positions through which people can fall should be possible to be closed.

6.2.2.7 Lashing positions should not contain obstructions, such as storage bins or guides to reposition hatch covers.

6.2.3 ***Fencing design***

6.2.3.1 Bridges and platforms, where appropriate, should be fenced. As a minimum, fencing design should take into consideration:

- **.1** the strength and height of the rails should be designed to prevent workers from falling;
- **.2** flexibility in positioning the fencing of gaps. A horizontal unfenced gap should not be greater than 300mm;
- **.3** provisions for locking and removal of fencing as operational situations change based on stowage anticipated for that area;
- **.4** damage to fencing and how to prevent failure due to that damage; and
- **.5** adequate strength of any temporary fittings. These should be capable of being safely and securely installed.

6.2.3.2 The top rail of fencing should be 1m high from the base, with two intermediate rails. The opening below the lowest course of the guard rails should not exceed 230mm. The other courses should not be more than 380mm apart.

6.2.3.3 Where possible fences and handrails should be highlighted with a contrasting colour to the background.

6.2.3.4 Athwartships cargo securing walkways should be protected by adequate fencing if an unguarded edge exists when the hatch cover is removed.

6.2.4 ***Ladder and manhole design***

6.2.4.1 Where a fixed ladder gives access to the outside of a lashing position, the stringers should be connected at their extremities to the guardrails of the lashing position, irrespective of whether the ladder is sloping or vertical.

6.2.4.2 Where a fixed ladder gives access to a lashing position through an opening in the platform, the opening shall be protected with either a fixed grate with a lock back mechanism, which can be closed after access, or fencing. Grabrails should be provided to ensure safe access through the opening.

6.2.4.3 Where a fixed ladder gives access to a lashing position from the outside of the platform, the stringers of the ladder should be opened above the platform level to give a clear width of 700 to 750mm to enable a person to pass through the stringers.

6.2.4.4 A fixed ladder should not slope at an angle greater than 25◦ from the vertical. Where the slope of a ladder exceeds 15◦ from the vertical, the ladder should be provided with suitable handrails not less than 540mm apart, measured horizontally.

6.2.4.5 A fixed vertical ladder of a height exceeding 3m, and any fixed vertical ladder, from which a person may fall into a hold, should be fitted with guard hoops, which should be constructed in accordance with paragraphs 6.2.4.6 and 6.2.4.7.

6.2.4.6 The ladder hoops should be uniformly spaced at intervals not exceeding 900mm and should have a clearance of 750mm from the rung to the back of the hoop and be connected by longitudinal strips secured to the inside of the hoops, each equally spaced round the circumference of the hoop.

6.2.4.7 The stringers should be carried above the floor level of the platform by at least 1m and the ends of the stringers should be given lateral support and the top step or rung should be level with the floor of the platform unless the steps or rungs are fitted to the ends of the stringers.

6.2.4.8 As far as practicable, access ladders and walkways, and work platforms should be designed so that workers do not have to climb over piping or work in areas with permanent obstructions.

6.2.4.9 There should be no unprotected openings in any part of the workplace. Access openings must be protected with handrails or access covers that can be locked back during access.

6.2.4.10 As far as practicable, manholes should not be situated in transit areas; however, if they are, proper fencing should protect them.

6.2.4.11 Access ladders and manholes should be large enough for persons to safely enter and leave.

6.2.4.12 A foothold at least 150mm deep should be provided.

6.2.4.13 Handholds should be provided at the top of the ladder to enable safe access to the platform to be gained

6.2.4.14 Manhole openings that may present a fall hazard should be highlighted in contrasting colour around the rim of the opening.

6.2.4.15 Manhole openings at different levels of the lashing bridge should not be located directly below one another, as far as practicable.

6.3 Lashing systems

6.3.1 *General provisions*

Lashing systems, including tensioning devices, should:

.1 conform to international standards,* where applicable;

.2 be compatible with the planned container stowages;

.3 be compatible with the physical ability of persons to safely hold, deploy and use such equipment;

.4 be uniform and compatible, e.g., twistlocks and lashing rod heads should not interfere with each other;

.5 be subject to a periodic inspection and maintenance regime. Non-conforming items should be segregated for repair or disposal; and

.6 be according to the CSM.

6.3.2 *Twistlock design*

6.3.2.1 Shipowners should ensure that the number of different types of twistlocks provided for cargo securing is kept to a minimum and clear instructions are provided for their operation. The use of too many different types of twistlocks may lead to confusion as to whether the twistlocks are locked.

6.3.2.2 The design of twistlocks should ensure the following:

.1 positive locking with easy up and down side identification;

.2 dislodging from corner fitting is not possible even when grazing a surface;

.3 access and visibility of the unlocking device is effective in operational situations;

.4 unlocked positions are easily identifiable and do not relock inadvertently due to jolting or vibration; and

.5 unlocking poles are as light as possible, of a simple design for ease of use.

* Refer to standard ISO 3874 – The Handling and Securing of Type 1 Freight Containers, Annex A-D

6.3.2.3 Where it is not feasible to entirely eliminate working on the tops of container stows, the twistlock designs used should minimize the need for such working, e.g., use of SATLs, fully automatic twistlocks or similar design.

6.3.3 ***Lashing rod design***

6.3.3.1 The design of containership securing systems should take into account the practical abilities of the workers to lift, reach, hold, control and connect the components called for in all situations anticipated in the cargo securing plan.

6.3.3.2 The maximum length of a lashing rod should be sufficient to reach the bottom corner fitting of a container on top of two high cube containers and be used in accordance with the instructions provided by the manufacturers.

6.3.3.3 The weight of lashing rods should be minimized as low as possible consistent with the necessary mechanical strength.

6.3.3.4 The head of the lashing rod that is inserted in the corner fitting should be designed with a pivot/hinge or other appropriate device so that the rod does not come out of the corner fitting accidentally.

6.3.3.5 The rod's length in conjunction with the length and design of the turnbuckle should be such that the need of extensions is eliminated when lashing high cube (9'6") containers.

6.3.3.6 Lightweight rods should be provided where special tools are needed to lash high cube containers.

6.3.4 ***Turnbuckle design***

6.3.4.1 Turnbuckle end fittings should be designed to harmonize with the design of lashing rods.

6.3.4.2 Turnbuckles should be designed to minimize the work in operating them.

6.3.4.3 Anchor points for turnbuckles should be positioned to provide safe handling and to prevent the bending of rods.

6.3.4.4 To prevent hand injury during tightening or loosening motions, there should be a minimum distance of 70mm between turnbuckles.

6.3.4.5 The turnbuckle should incorporate a locking mechanism which will ensure that the lashing does not work loose during the voyage.

6.3.4.6 The weight of turnbuckles should be minimized as low as possible consistent with the necessary mechanical strength.

6.3.5 ***Storage bins and lashing equipment stowage design***

6.3.5.1 Bins or stowage places for lashing materials should be provided.

6.3.5.2 All lashing gear should be stowed as close to its intended place of use as possible.

6.3.5.3 The stowage od securing devices should be arranged so they can easily be retrieved from their stowage location.

6.3.5.4 Bins for faulty or damaged gear should also be provided and appropriately marked.

6.3.5.5 Bins should be of sufficient strength.

6.3.5.6 Bins and their carriers should be designed to be lifted off the vessel and restowed.

6.4 Lighting design

A Lighting plan should be developed to provide:

.1 the proper illumination of access ways, not less than 10 lux (1 foot candle),* taking into account the shadows created by containers that may be stowed in the area to be lit, for example different length containers in or over the work area;

.2 a separate fixed or temporary (where necessary) lighting system for each working space between the container bays, which is bright enough, but not less than 50 lux (5 foot candle),* for the work to be done, but minimizes glare to the deck workers;

.3 such illumination should, where possible, be designed as a permanent installation and adequately guarded against breakage; and

.4 the illumination intensity should take into consideration the distance to the uppermost reaches where cargo securing equipment is utilized.

7 Operational and maintenance procedures

7.1 Introduction

7.1.1 Procedures for safe lashing and securing operations should be included in the ship's Safety Management System as part of the ISM Code documentation.

7.1.2 Upon arrival of the ship, a safety assessment of the lashing positions and the access to those positions should be made before securing work commences.

* Refer to Safety and Health in Ports, ILO Code of Practice, section 7.1.5.

7.2 Operational procedures

7.2.1 *Container deck working*

7.2.1.1 Transit areas should be safe and clear of cargo and all equipment

7.2.1.2 Openings that are necessary for the operation of the ship, which are not protected by fencing, should be closed during cargo securing work. Any necessarily unprotected openings on work platforms (i.e., those with a potential fall of less than 2m), and gaps and apertures on deck should be properly highlighted.

7.2.1.3 The use of fencing is essential to prevent falls. When openings in safety barriers are necessary to allow container crane movements, particularly with derricking cranes, removable fencing should be used whenever possible.

7.2.1.4 It should be taken into account that when lifting lashing bars that can weigh between 11 and 21kg and turnbuckles between 16 and 23Kg, there may be a risk of injury and severe illness as a result of physical strain if handled above shoulder height with arms extended. It is therefore recommended that personnel work in pairs to reduce the individual workload in securing the lashing gear.

7.2.1.5 The company involved with cargo operation should anticipate, identify, evaluate and control hazards and take appropriate measures to eliminate or minimize potential hazards to prevent in particular harmful lumbar spinal damage and severe illness as a result of physical strain.

7.2.1.6 Personnel engaged in containership cargo operations should wear appropriate Personnel Protective Equipment (PPE) whilst carrying out lashing operations. The PPE should be provided by the company.

7.2.1.7 Manual twistlocks should only be used where safe access is provided.

7.2.1.8 Containers should not be stowed in spaces configured for larger sized containers unless they can be secured under safe working conditions.

7.2.2 *Container top working*

7.2.2.1 When work on container tops can not be avoided, safe means of access should be provided by the container cargo operation terminal, unless the ship has appropriate means of access in accordance with the CSAP.

7.2.2.2 Recommended practice involves the use of a safety cage lifted by a spreader to minimize the risk to personnel.

7.2.2.3 A safe method of work should be developed and implemented to ensure the safety of lashers when on top of container stows on deck. Where practical, the use of fall prevention equipment should take precedence over fall arrest equipment.

7.2.3 ***Failure to provide safe lashing stations on board/carry out lashing by port workers***

7.2.3.1 Where there are lashing and unlashing locations on board ship where no fall protection, such as adequate handrails are provided, and no other safe method can be found, the containers should not be lashed or unlashed and the situation should be reported to shoreside supervisor and the master or deck officer immediately.

7.2.3.2 If protective systems cannot be designed to provide safe protected access and lashing work positions, in all cargo configurations then cargo should not be stowed in that location. Neither crew nor shore workers should be subjected to hazardous working conditions in the normal course of securing cargo.

7.3 Maintenance

7.3.1 In line with section 2.3 (Inspection and maintenance schemes) of the Revised guidelines for the preparation of the Cargo Securing Manual (MSC.1/Circ.1353) all ships should maintain a record book, which should contain the procedures for accepting, maintaining and repairing or rejecting of cargo securing devices. The record book should also contain a record of inspections.

7.3.2 Lighting should be properly maintained.

7.3.3 Walkways, ladders, stairways and fencings should be subject to a periodic maintenance programme which will reduce/prevent corrosion and prevent subsequent collapse.

7.3.4 Corroded walkways, ladders, stairways and fencings should be repaired or replaced as soon as practicable. The repairs should be effected immediately if the corrosion could prevent safe operations.

7.3.5 It should be borne in mind that turnbuckles covered with grease are difficult to handle when tightening.

7.3.6 Storage bins and their carriers should be maintained in a safe condition.

8 Specialized container safety design

8.1 Temperature controlled unit power outlets should provide a safe, watertight electrical connection.

8.2 Temperature controlled unit power outlets should feature a heavy duty, interlocked and circuit breaker protected electrical power outlet. This should ensure the outlet can not be switched “live”

until a plug is fully engaged and the actuator rod is pushed to the "On" position. Pulling the actuator rod to the "Off" position should manually de-energize the circuit.

8.3 The temperature controlled unit power circuit should de-energize automatically if the plug is accidentally withdrawn while in the "On" position. Also, the interlock mechanism should break the circuit while the pin and sleeve contacts are still engaged. This provides total operator safety and protection against shock hazard while eliminating arcing damage to the plug and receptacle.

8.4 Temperature controller unit power outlets should be designed to ensure that the worker is not standing directly in front of the socket when switching takes place.

8.5 The positioning of the temperature controlled unit feed outlets should not be such that the flexible cabling needs to be laid out in such a way as to cause a tripping hazard.

8.6 Stevedores or ship's crew who are required to handle temperature controlled unit cables and/or connect and disconnect reefer units should be given training in recognizing defective wires and plugs.

8.7 Means or provisions should be provided to lay the temperature controlled unit cables in and protect them from the lashing equipment falling on them during lashing operations.

8.8 Defective or inoperative temperature controlled unit plugs/electrical banks should be identified and confirmed as "locked out/tagged out" by the vessel.

9 References

ILO Code of Practice – safety and Health in Ports

ILO Convention 152 – Occupational Safety and Health in Dock Work

ISO Standard 3874 – The Handling and Securing of Type 1 Freight Containers

International Convention on Load Lines, 1966, as modified by the 1988 LL Protocol

Revised Recommendations on safety of personnel during container securing operations (MSC.1/Circ.1263)

Revised guidelines for the preparation of the Cargo Securing manual (MSC.1/Circ.1353)

Appendix 1

Resolution A.489 (XII)
Adopted 19 November 1981

Safe stowage and securing of cargo units and other entities in ships other than cellular containerships

Appendix 2

Revised guidelines for the preparation of the Cargo Securing Manual

MSC.1/Circ.1353

Appendix 3

Resolution A.533(13)

Adopted 17 November 1983 as amended by MSC.1/Circ.1354

Elements to be taken into account when considering the safe stowage and securing of cargo units and vehicles in ships

Appendix 4

Resolution A.581(14)

Adopted 20 November 1985 as amended by MSC/Circ.812 and MSC.1/Circ.1355

Guidelines for securing arrangements for the transport of road vehicles on ro-ro ships

Appendix 5

Resolution A.864(20)
Adopted 27 November 1997

Recommendations for entering enclosed spaces aboard ships